Technical Specification code: MAT-E&C-NC-2021-0033-EGIN.
Version no. 5 dated 30/07/2021

Subject: Global Infrastructure and Networks – GSS002 CONCRETE POLES FOR DISTRIBUTION NETWORK

Application Areas
Perimeter: *Global*
Staff Function: -
Service Function: -
Business Line: *Infrastructure & Networks*

CONTENTS

1 DOCUMENT AIMS AND APPLICATION AREA 2

2 DOCUMENT VERSION MANAGEMENT 2

3 UNITS IN CHARGE OF THE DOCUMENT 3

4 REFERENCES 3

5 ORGANIZATIONAL process POSITION IN THE PROCESS TAXONOMY 3

6 DEFINITIONS AND ACRONYMS 4

7 DESCRIPTION 5

8 Annexes 13

THE HEAD OF NETWORK COMPONENTS
Maurizio Mazzotti

1. DOCUMENT AIMS AND APPLICATION AREA

The aim of this document is to provide technical requirements for the supply of poles to be used in the distribution networks of Enel Group Distribution Companies, listed below:

Country	Distribution Company
Argentina	Edesur
Brazil	Enel Distribuição Rio Enel Distribuição Ceará Enel Distribuição Goiás Enel Distribuição São Paulo
Chile	Enel Distribución Chile
Colombia	Codensa
Italy	e-distribuzione
Perú	Enel Distribución Perú
Romania	Enel Distributie Banat Enel Distributie Dobrogea Enel Distributie Muntenia

Distribution Companies

1.1 RELATED DOCUMENTS TO BE IMPLEMENTED AT COUNTRY LEVEL

This document applies to both Enel Global Infrastructure and Networks Srl Company and to Infrastructure and Networks Business Line perimeter, when each Company does not have to issue further documents.

2. DOCUMENT VERSION MANAGEMENT

Version	Date	Main changes description
00	30/03/2015	First emission
01	03/05/2016	Correction of Table 6, Table 18 and update of the Common List
02	10/07/2018	Local Section Latam general update
03	10/08/2018	Correction of Table 3a and Common list for Brazil
04	21/09/2018	Additional requirements for Enel Distribution Colombia
05	30/07/2021	Issuing of “Global Infrastructure and Networks - GSS002 CONCRETE POLES FOR DISTRIBUTION NETWORK. Eliminated poles with H section. Common list update. Editorial Update. Brazil, Peru, Argentina, Chile and Colombia local section update. Spain out of application area.

3. UNITS IN CHARGE OF THE DOCUMENT

Responsible for drawing up the document:

- Global Infrastructure and Networks: Engineering and Construction / Components and Devices Design unit / Network Components unit

Responsible for authorizing the document:

- Global Infrastructure and Networks: Head of Network Components unit
- Global Infrastructure and Networks: Head of Health, Safety, Environment and Quality unit.

4. REFERENCES

- Code of Ethics of Enel Group;
- Enel Human Right Policy;
- The Enel Group Zero Tolerance of Corruption (ZTC) Plan;
- Organization and management model as per Legislative Decree No. 231/2001;
- RACI Handbook Infrastructure and Networks no. 06;
- Enel Global Compliance Program (EGCP);
- Integrated Policy of Quality, Health and Safety, Environment and anti-Bribery.

5. ORGANIZATIONAL PROCESS POSITION IN THE PROCESS TAXONOMY

Value Chain/Process Area: Engineering and Construction

Macro Process: Devices and components development

Process: Standard Catalog Management

6. DEFINITIONS AND ACRONYMS

Acronym and Key words	Description
Technical Conformity Assessment (TCA)	A "conformity assessment" with respect to "specified requirements" consists in functional, dimensional, constructional and test characteristics required for a product (or a series of products) and quoted in technical specifications and quality requirements issued by Enel Group distribution companies. This also includes the verification of conformity with respect to local applicable regulation and laws and possession of relevant requested certifications.
Type A documentation	Not confidential documents used for product manufacturing and management from which it is possible to verify the product conformity to all technical specification requirements, directly or indirectly.

6.1 ENEL GLOBAL INFRASTRUCTURE AND NETWORKS COUNTRIES REFERENCE STANDARDS

Reference documents listed below (amendments included) shall be the edition in-force at the contract date.

ISO/IEC 17000	Conformity assessment – Vocabulary and general principles
ISO/IEC 17020	General criteria for the operation of various types of bodies performing inspection
ISO/IEC 17025	General requirements for the competence of testing and calibration laboratories
ISO/IEC 17050-1	Conformity assessment - Supplier's declaration of conformity - Part 1: General requirements (ISO/IEC 17050-1:2004, corrected version 2007-06-15)
ISO/IEC 17050-2	Conformity assessment - Supplier's declaration of conformity - Part 2: Supporting documentation (ISO/IEC 17050-2:2004)
ISO/IEC 17065	Conformity assessment – Requirements for bodies certifying products, processes and services

7. DESCRIPTION

7.1 LIST OF COMPONENTS

Item	GS Type Code	Distribution Company and Country	Country Code	Code Type of Pole	Nominal Length (m)	Type	Description	Top Diameter (mm)	Butt Diameter (mm)	Conicity (mm/m)	Coating (mm)	Mass (Kg)	Ultimate design load / Nominal Stress (daN)	Safety Factor	Minimum failure load (daN)	Maximum Bending Load, R (daN)
1	GSS002/01	ED-Italy	230212	HC	10	A	10 / A / 12	120	270	15	≥10	620	304	-	412	-
2	GSS002/02	ED-Italy	230222	HC	10	B	10 / B / 14	140	290	15	≥10	720	393	-	550	-
3	GSS002/03	ED-Italy	230232	HC	10	C	10 / C / 18	180	330	15	≥10	950	606	-	824	-
4	GSS002/04	ED-Italy	230242	HC	10	D	10 / D / 20	200	350	15	≥15	1120	632	-	1091	-
5	GSS002/05	ED-Italy	230252	HC	10	E	10 / E / 24	240	390	15	≥15	1450	940	-	1638	-
6	GSS002/06	ED-Italy	230262	HC	10	F	10 / F / 27	270	420	15	≥15	1700	1345	-	2188	-
7	GSS002/07	ED-Italy	230272	HC	10	G	10 / G / 31	310	460	15	≥15	2100	2019	-	3286	-
8	GSS002/08	ED-Italy	230224	HC	12	B	12 / B / 14	140	320	15	≥10	1000	420	-	550	-
9	GSS002/09	ED-Italy	230234	HC	12	C	12 / C / 18	180	360	15	≥10	1270	614	-	824	-
10	GSS002/10	ED-Italy	230244	HC	12	D	12 / D / 20	200	380	15	≥15	1460	650	-	1099	-
11	GSS002/11	ED-Italy	230254	HC	12	E	12 / E / 24	240	420	15	≥15	1900	962	-	1648	-
12	GSS002/12	ED-Italy	230264	HC	12	F	12 / F / 27	270	450	15	≥15	2250	1312	-	2198	-
13	GSS002/13	ED-Italy	230274	HC	12	G	12 / G / 31	310	490	15	≥15	2700	2055	-	3296	-
14	GSS002/14	ED-Italy	230276	HC	12	H	12 / H / 32	320	500	15	≥15	3600	4168	-	6280	-
15	GSS002/15	ED-Italy	230245	HC	14	D	14 / D / 20	200	410	15	≥15	1910	640	-	1099	-
16	GSS002/16	ED-Italy	230255	HC	14	E	14 / E / 24	240	450	15	≥15	2400	993	-	1648	-
17	GSS002/17	ED-Italy	230265	HC	14	F	14 / F / 27	270	480	15	≥15	2800	1284	-	2198	-
18	GSS002/18	ED-Italy	230275	HC	14	G	14 / G / 31	310	520	15	≥15	3400	1975	-	3296	-
19	GSS002/19	ED-Italy	228010	HC	10	G	10 / G / 31	310	460	15	≥15	2100	2019	-	3286	-
20	GSS002/01	ED-Romania	230212	HC	10	A	10 / A / 12	120	270	15	≥10	620	304	-	412	-
21	GSS002/02	ED-Romania	230222	HC	10	B	10 / B / 14	140	290	15	≥10	720	393	-	550	-
22	GSS002/03	ED-Romania	230232	HC	10	C	10 / C / 18	180	330	15	≥10	950	606	-	824	-
23	GSS002/04	ED-Romania	230242	HC	10	D	10 / D / 20	200	350	15	≥15	1120	632	-	1091	-
24	GSS002/05	ED-Romania	230252	HC	10	E	10 / E / 24	240	390	15	≥15	1450	940	-	1638	-
25	GSS002/06	ED-Romania	230262	HC	10	F	10 / F / 27	270	420	15	≥15	1700	1345	-	2188	-
26	GSS002/07	ED-Romania	230272	HC	10	G	10 / G / 31	310	460	15	≥15	2100	2019	-	3286	-
27	GSS002/08	ED-Romania	230224	HC	12	B	12 / B / 14	140	320	15	≥10	1000	420	-	550	-
28	GSS002/09	ED-Romania	230234	HC	12	C	12 / C / 18	180	360	15	≥10	1270	614	-	824	-
29	GSS002/10	ED-Romania	230244	HC	12	D	12 / D / 20	200	380	15	≥15	1460	650	-	1099	-
30	GSS002/11	ED-Romania	230254	HC	12	E	12 / E / 24	240	420	15	≥15	1900	962	-	1648	-
31	GSS002/12	ED-Romania	230264	HC	12	F	12 / F / 27	270	450	15	≥15	2250	1312	-	2198	-
32	GSS002/13	ED-Romania	230274	HC	12	G	12 / G / 31	310	490	15	≥15	2700	2055	-	3296	-

Technical Specification code: MAT-E&C-NC-2021-0033-EGIN.
Version no. 5 dated 30/07/2021

Subject: Global Infrastructure and Networks – GSS002 CONCRETE POLES FOR DISTRIBUTION NETWORK

Application Areas
Perimeter: *Global*
Staff Function: -
Service Function: -
Business Line: *Infrastructure & Networks*

Item	GS Type Code	Distribution Company and Country	Country Code	Code Type of Pole	Nominal Length (m)	Type	Description	Top Diameter (mm)	Butt Diameter (mm)	Conicity (mm/m)	Coating (mm)	Mass (Kg)	Ultimate design load /Nominal Stress (daN)	Safety Factor	Minimum failure load (daN)	Maximum Bending Load, R (daN)
33	GSS002/14	ED-Romania	230276	HC	12	H	12 / H / 32	320	500	15	≥15	3600	4168	-	6280	-
34	GSS002/15	ED-Romania	230245	HC	14	D	14 / D / 20	200	410	15	≥15	1910	640	-	1099	-
35	GSS002/16	ED-Romania	230255	HC	14	E	14 / E / 24	240	450	15	≥15	2400	993	-	1648	-
36	GSS002/17	ED-Romania	230265	HC	14	F	14 / F / 27	270	480	15	≥15	2800	1284	-	2198	-
37	GSS002/18	ED-Romania	230275	HC	14	G	14 / G / 31	310	520	15	≥15	3400	1975	-	3296	-
38	GSS002/19	ED-Romania	228010	HC	10	G	10 / G / 31	310	460	15	≥15	2100	2019	-	3286	-
39	GSS002/20	Brazil	230065	HC/HCV	10	C-17	10/300 daN	170	370	20	≥15	910	300	2	600	-
40	GSS002/21	Brazil	230064	HC/HCV	10	C-19	10/600 daN	190	390	20	≥15	1090	600	2	1200	-
41	GSS002/22	Brazil	230063	HC/HCV	10	C-23	10/1000 daN	230	430	20	≥15	1350	1000	2	2000	-
42	GSS002/23	Brazil	230062	HC/HCV	12	C-17	12/300 daN	170	410	20	≥15	1130	300	2	600	-
43	GSS002/24	Brazil	230061	HC/HCV	12	C-19	12/600 daN	190	430	20	≥15	1440	600	2	1200	-
44	GSS002/25	Brazil	230060	HC/HCV	12	C-23	12/1000 daN	230	470	20	≥15	1770	1000	2	2000	-
45	GSS002/26	Brazil	230059	HC/HCV	12	C-33	12/2000 daN	330	570	20	≥15	3000	2000	2	4000	-
46	GSS002/27	Brazil	230058	HC/HCV	12	C-.43	12/3000 daN	430	670	20	≥15	4150	3000	2	6000	-
47	GSS002/28	Brazil	230057	HC/HCV	14	C-23	14/1000 daN	230	510	20	≥15	2100	1000	2	2000	-
48	GSS002/29	Brazil	230056	HC/HCV	14	C-19	14/600 daN	190	470	20	≥15	1900	600	2	1200	-
49	GSS002/30	Brazil	230055	HC/HCV	14	R-10	14/2000 daN	330	610	20	≥15	3600	2000	2	4000	-
50	GSS002/31	Brazil	230054	HC/HCV	16	R-5	16/1000 daN	230	550	20	≥15	2400	1000	2	2000	-
51	GSS002/32	Brazil	230066	HC/HCV	16	R-103	16/2000 daN	330	650	20	≥15	4300	2000	2	4000	-
52	GSS002/36	CD-Colombia	230053	HC/HCV	10	-	10 x 300	160	310	15	20	750	300	2,5	735,5	-
53	GSS002/37	CD-Colombia	230955	HC/HCV	10	-	10 x 400	190	340	15	20	1040	412	2,5	1030	-
54	GSS002/38	CD-Colombia	230957	HC/HCV	12	-	12 x 300	160	340	15	20	1020	300	2,5	735,5	-
55	GSS002/39	CD-Colombia	230966	HC/HCV	12	-	12 x 400	190	370	15	20	1380	412	2,5	1030	-
56	GSS002/40	CD-Colombia	230052	HC/HCV	12	-	12 x 500	200	380	15	20	1620	529,6	2,5	1324	-
57	GSS002/41	CD-Colombia	230051	HC/HCV	12	-	12 x 1000	280	460	15	20	2220	1000	2,5	2500	-
58	GSS002/42	CD-Colombia	230050	HC/HCV	12	-	12 x 1300	320	500	15	20	2450	1300	2,5	3250	-
59	GSS002/43	CD-Colombia	230958	HC/HCV	14	-	14 x 300	160	370	15	20	1360	300	2,5	735,5	-
60	GSS002/44	CD-Colombia	230960	HC/HCV	14	-	14 x 400	190	400	15	20	1725	412	2,5	1030	-
61	GSS002/45	CD-Colombia	230965	HC/HCV	14	-	14 x 500	200	410	15	20	1900	529,6	2,5	1324	-
62	GSS002/46	CD-Colombia	230049	HC/HCV	14	-	14 x 1000	280	490	15	20	2800	1000	2,5	2500	-
63	GSS002/47	CD-Colombia	230048	HC/HCV	14	-	14 x 1300	320	530	15	20	3050	1300	2,5	3250	-
64	GSS002/48	CD-Colombia	230047	HC/HCV	14	-	14 x 2000	390	600	15	20	4250	2000	2,5	5000	-
65	GSS002/49	ES-Argentina	0118-0214	HC	10	-	10 m, 400 daN	220 to 240	-	15	≥15	1350	400	3	According to tests	1200
66	GSS002/50	ES-Argentina	0118-0213	HC	12	-	12m, 400 daN	220 to 240	-	15	≥15	1800	400	3	According to tests	1200

Technical Specification code: MAT-E&C-NC-2021-0033-EGIN.
Version no. 5 dated 30/07/2021

Subject: Global Infrastructure and Networks – GSS002 CONCRETE POLES FOR DISTRIBUTION NETWORK

Application Areas
Perimeter: *Global*
Staff Function: -
Service Function: -
Business Line: *Infrastructure & Networks*

Item	GS Type Code	Distribution Company and Country	Country Code	Code Type of Pole	Nominal Length (m)	Type	Description	Top Diameter (mm)	Butt Diameter (mm)	Conicity (mm/m)	Coating (mm)	Mass (Kg)	Ultimate design load /Nominal Stress (daN)	Safety Factor	Minimum failure load (daN)	Maximum Bending Load, R (daN)
67	GSS002/51	ES-Argentina	0118-0212	HC	12	-	12m, 600 daN	240 to 260	-	15	≥15	1950	600	3	According to tests	1800
68	GSS002/52	ES-Argentina	0118-0211	HC	12	-	12m, 800 daN	260 to 280	-	15	≥15	2100	800	3	According to tests	2400
69	GSS002/53	ES-Argentina	0118-0209	HC	14	-	14m, 400 daN	220 to 240	-	15	≥15	2100	400	3	According to tests	1200
70	GSS002/54	ES-Argentina	0118-0210	HC	14	-	14m, 600 daN	240 to 260	-	15	≥15	2400	600	3	According to tests	1800
71	GSS002/55	ES-Argentina	0118-0208	HC	14	-	14m, 800 daN	260 to 280	-	15	≥15	2700	800	3	According to tests	2400
72	GSS002/20	Chile	230080	HC/HCV	10	C-17	10/300 daN	170	370	20	≥15	910	300	2	600	-
73	GSS002/21	Chile	230081	HC/HCV	10	C-19	10/600 daN	190	390	20	≥15	1090	600	2	1200	-
74	GSS002/22	Chile	230104	HC/HCV	10	C-23	10/1000 daN	230	430	20	≥15	1350	1000	2	2000	-
75	GSS002/23	Chile	230079	HC/HCV	12	C-17	12/300 daN	170	410	20	≥15	1130	300	2	600	-
76	GSS002/24	Chile	230078	HC/HCV	12	C-19	12/600 daN	190	430	20	≥15	1440	600	2	1200	-
77	GSS002/25	Chile	230077	HC/HCV	12	C-23	12/1000 daN	230	470	20	≥15	1770	1000	2	2000	-
78	GSS002/26	Chile	230076	HC/HCV	12	C-33	12/2000 daN	330	570	20	≥15	3000	2000	2	4000	-
79	GSS002/27	Chile	230075	HC/HCV	12	C-43	12/3000 daN	430	670	20	≥15	4150	3000	2	6000	-
80	GSS002/33	Chile	230074	HC/HCV	14	C-17	14/300 daN	170	450	20	≥15	1980	300	2	600	-
81	GSS002/28	Chile	230073	HC/HCV	14	C-23	14/1000 daN	230	510	20	≥15	2100	1000	2	2000	-
82	GSS002/29	Chile	230072	HC/HCV	14	C-19	14/600 daN	190	470	20	≥15	1900	600	2	1200	-
83	GSS002/30	Chile	230071	HC/HCV	14	R-10	14/2000 daN	330	610	20	≥15	3600	2000	2	4000	-
84	GSS002/34	Chile	230070	HC/HCV	14	C-43	14/3000 daN	430	710	20	≥15	4850	3000	2	6000	-
85	GSS002/31	Chile	230069	HC/HCV	16	R-5	16/1000 daN	330	550	20	≥15	2400	1000	2	2000	-
86	GSS002/32	Chile	230068	HC/HCV	16	R-103	16/2000 daN	330	650	20	≥15	4300	2000	2	4000	-
87	GSS002/35	Chile	230067	HC/HCV	16	C-43	16/3000 daN	430	750	20	≥15	5650	3000	2	6000	-
88	GSS002/56	ES-Peru	230824	HC	8	-	8/200/2/150/270	150	270	15	20	650	200	2	400	-
89	GSS002/57	ES-Peru	230085	HC	8	-	8/600/2/210/330	210	330	15	25	975	300	2	600	-
90	GSS002/58	ES-Peru	230089	HC	10	-	10/300/2/150/300	150	300	15	25	870	600	2	1200	-
91	GSS002/59	ES-Peru	230084	HC	10	-	10/600/2/210/360	210	360	15	25	1275	300	2,5	750	-
92	GSS002/60	ES-Peru	230090	HC	12	-	12/300/2/150/330	150	330	15	25	1200	600	2,5	1500	-
93	GSS002/61	ES-Peru	230083	HC	12	-	12/600/2/210/390	210	390	15	25	1870	300	2,5	750	-
94	GSS002/62	ES-Peru	230094	HC	14	-	14/300/2,5/180/390	180	390	15	30	1980	600	2,5	1500	-
95	GSS002/63	ES-Peru	230093	HC	14	-	14/600/2,5/210/420	210	420	15	30	2450	800	2,5	2000	-
96	GSS002/64	ES-Peru	230092	HC	14	-	14/800/2,5/240/450	240	450	15	30	2875	2000	2,5	5000	-
97	GSS002/65	ES-Peru	230091	HC	14	-	14/2000/2,5/330/540	330	540	15	30	4600	600	2,5	1500	-
98	GSS002/66	ES-Peru	230088	HC	16	-	16/300/2,5/180/420	180	420	15	30	2560	300	2,5	750	-
99	GSS002/67	ES-Peru	230086	HC	16	-	16/600/2,5/210/450	210	450	15	30	3150	600	2,5	1500	-
100	GSS002/68	ES-Peru	230087	HC	16	-	16/800/2,5/240/480	240	480	15	30	3640	800	2,5	2000	-
101	GSS002/69	ES-Peru	230082	HC	16	-	16/2000/2,5/330/570	330	570	15	30	5500	2000	2,5	5000	-

Table 1

7.2 APPLICABLE LAWS AND REFERENCE STANDARDS

See Local section

7.3 SERVICE CONDITIONS

Poles for distribution networks shall be suitable to operate in outdoor environments. For seismic requirements see Local Sections.

7.4 TECHNICAL CHARACTERISTICS

Item	Characteristic	Requirement
7.4.1	Manufacturing materials	The materials used for manufacturing the poles, shall be tested in accordance with corresponding Local Standards. See Local section.
7.4.2	Dimensions	See Local Section.
7.4.3	Finished pole	The poles shall provide sufficiently smooth outer surfaces, no sharp edges, no cracks or fractures (except small capillary cracks, not longitudinally oriented, inherent in the material) without visible burrs.
7.4.4	Holes	Holes for fittings and cables shall be cylindrical and shall comply the following requirements: a) The holes for fixing fittings shall have an axis perpendicular to the pole axis and be centered on opposite sides. b) The holes shall not provide obstructions and shall not expose any part of the rebar. c) The location of the holes and their tolerances are specified in the Local Section.
7.4.5	Embedment length	Is the segment length of the pole buried firmly in the earth or concrete base. See Local Section.
7.4.6	Sag	See Local Section.
7.4.7	Residual Sag	See Local Section.
7.4.8	Cracks	See Local Section.
7.4.9	Ultimate design load (En) / Nominal Stress	Normally referred to as "Nominal Stress" in national regulations. See Local Section.
7.4.10	Safety factor	Relationship between the Failure Load (the load which causes failure to occur in any element) and Ultimate design load. See Local Section.
7.4.11	Grounding or Earthing system	See Local Section.
7.4.12	Marking and designation of pole	All poles shall have a metal plate labeling (material shall aluminum alloy or stainless steel) embedded in the concrete, with characteristics shown in the local section. All poles also shall submit the following marks: • Mark of embedment height: with indelible green paint, strips with a length not less than 150 mm and wide not less than 25 mm, on diametrically opposite side on the surface of the pole, • Lifting mark, according to 7.4.15 For further information see local section

Item	Characteristic	Requirement
7.4.12	Marking and designation of pole	A triangular electric hazard warning plate shall be fixed on the pole at 100 mm below the Identification labeling. The warning plate shall be the following characteristics: • compliant to the dimensions shown in the following figure. 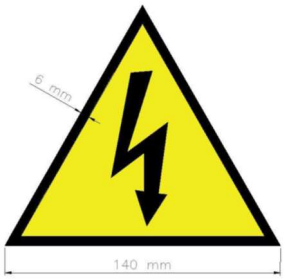 • Aluminum / Aluminum alloy or forex material with thickness between 0.5 and 2 mm • suitable for outdoor applications • Warning sign symbol in black (RAL 9005) on a yellow background (RAL1021) • Warning signal border black (RAL 9005) The fixing to the pole must be guaranteed for the useful life of the pole, in the foreseen operating conditions.
7.4.13	Lifetime	The poles manufactured under this specification shall have a minimum life of 35 years from the date of manufacturing (reference of batch number), with a failure percentage of 1% for the first 10 years and 1% for each 5 subsequent years, totaling 6% at the end of period.
7.4.14.	Design drawing	See Local Section.
7.4.15	Lifting requirements	In order to ensure correct lifting / transport / handling, concrete poles shall be marked, using indelible red paint, on diametrically opposite sides of the pole itself, with L/2 center of gravity to center of gravity distance. The strips shall have a length not less than 150 mm and wide not less than 25 mm. The manufacturer, based on the calculations and the lifting tests he will carry out for each type of pole, will provide the length A indicated in fig. A, which will determine the measure between the base of the pole and the first of the two goals. These lengths must be mentioned in the type A documentation and respected throughout the production. The aforementioned marking must be made in order to identify and indicate to the operator the exact position of the lifting sling. The highlighted grip points are intended for poles without installed shelves. The lifting scheme must also be created and be affixed to the accompanying notes (or attached to them). 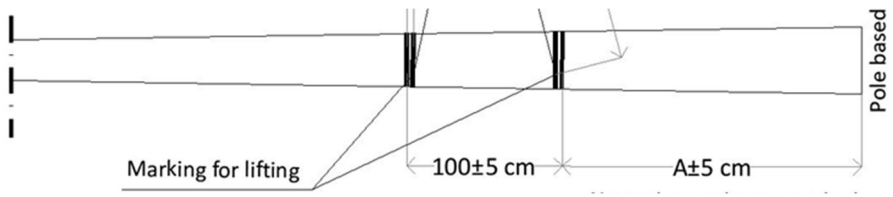

7.5 CONSTRUCTION CHARACTERISTICS

7.5.1. POLE TYPES

The classifications of concrete poles are shown in Table 1.

Type	Model	Description
HC	Centrifuged reinforced concrete pole	Centrifuged reinforced concrete pole whose geometric shape is that of a truncated circular ring section beam.
HCV	Reinforced vibrated concrete pole	Reinforced vibrated concrete pole whose geometric shape is that of a truncated circular ring section beam

Table 1

The typical configuration of Type HC (Centrifuged reinforced concrete pole) is shown in Figure 1.
The pole has the geometric shape of a truncated circular cross-section beam, hollow along nominal length.
For other requirements see the local section.

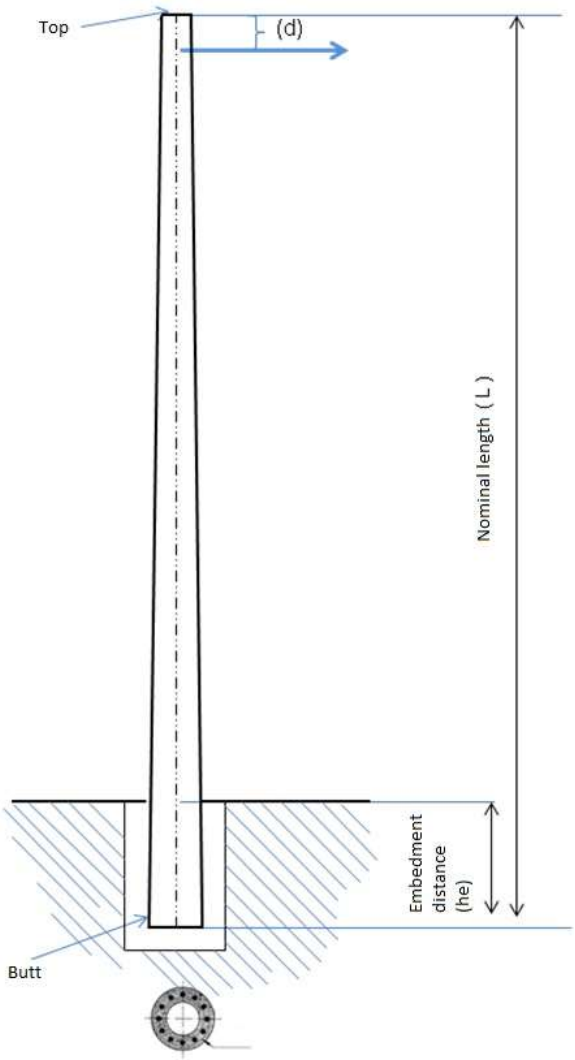

Figure 1 Scheme of type HC pole

The typical configuration of Type HCV (Reinforced vibrated concrete pole) is shown in Figure 2.

The pole has the geometric shape of a truncated circular cross-section beam, hollow along nominal length and closed on the top.

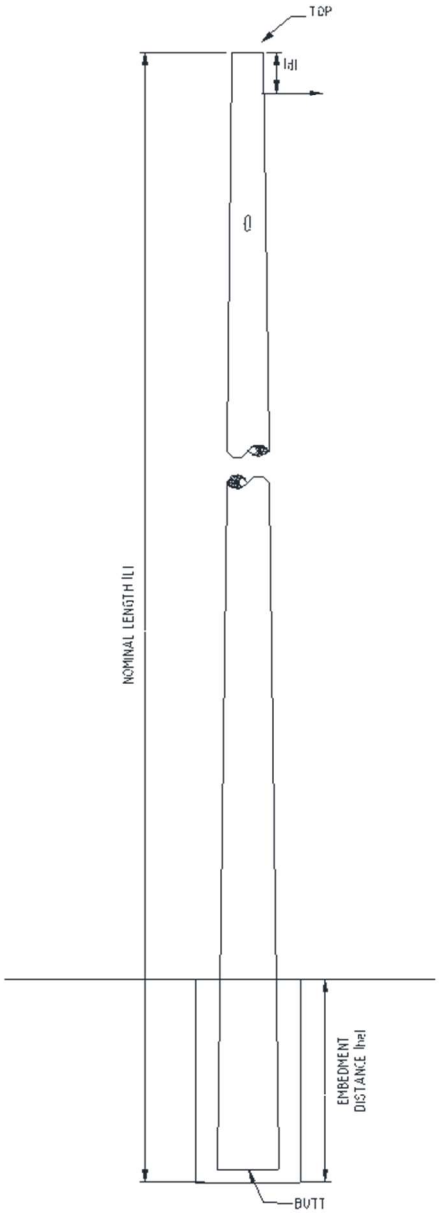

Figure 2 Scheme of type HCV pole

7.6 TESTING

7.6.1.Type Tests

Type tests shall be performed before supplying a type of pole covered by this standard in order to demonstrate satisfactory performance characteristics to meet the intended application. The sampling plan for type tests and the type test list are indicated in the Local section.

7.6.2. Acceptance tests

Acceptance tests shall be performed during the delivery and shall be carried out in the Supplier's facilities. The acceptance test list and sampling plan are indicated in the Local section.

7.7 CONDITIONS OF SUPPLY

7.7.1. Warranty

The manufacturer shall guarantee that the poles supplied meet all requirements of this technical specification.

The poles shall be warranted against manufacturing defects for a period of 5 years.

7.8 TECHNICAL CONFORMITY ASSESMENT

7.8.1. General conditions

The manufacturer shall provide personnel and equipment necessary to carry out type tests and acceptance tests described herein. Otherwise, the supplier could hire the service to a laboratory previously accepted by the customer and assume the cost. The product shall comply with the requirements of GSCG002 regarding the Technical Conformity Assessment.

The equipment should be properly calibrated by a laboratory certified or approved by the client. The manufacturer shall possess daily calibration certificates (to turn over) at the time of inspection.

7.8.2. Acceptance and rejection

All poles rejected during acceptance tests, which are within accepted lots, will be replaced by the manufacturer with new units in perfect condition without charge to the Customer.

Acceptance of a lot by the customer does not relieve the manufacturer of liability to provide poles with the requirements of this specification or invalidate claims that the customer makes about the quality of the material used and the manufacturing of the pole.

8. ANNEXES

8.1 LOCAL SECTION - ENEL BRASIL

N°	TITLE	DESCRIPTION - ENEL BRASIL
7.2	Local standards	ABNT NBR 5426:1985, Planos de amostragem e procedimentos na inspeção por atributos NBR16697:2018 - Cimento Portland – Requisitos ABNT NBR 15900-1:2009, Água para amassamento do concreto – Parte 1: Requisitos NBR 5738:2015: Concreto - Procedimento para moldagem e cura de corpos-de-prova. NBR 5739:2018: Concreto - Ensaios de compressão de corpos-de-prova cilíndricos NBR 6118:2014: Projeto de estruturas de concreto - Procedimento. NBR 6210:2008: Corrosão atmosférica – Materiais metálicos – Preparo, limpeza e determinação da taxa de corrosão de corpos-de-prova em ensaios de corrosão. NBR 7211:2009: Agregado para Concreto – Especificação. NBR 7480:2007: Aço destinado a armaduras para estruturas de concreto armado – Especificação. NBR 8451-1:2020: Postes de concreto armado e protendido para redes de distribuição e de transmissão de energia elétrica – Parte 1: Requisitos. NBR 8451-2:2020: Postes de concreto armado e protendido para redes de distribuição e de transmissão de energia elétrica – Parte 2: Padronização de postes para redes de distribuição de energia elétrica. NBR 8451-3:2020. Postes de concreto armado e protendido para redes de distribuição e de transmissão de energia elétrica – Parte 3: Ensaios mecânicos, cobrimento da armadura e inspeção geral. NBR 8451-4:2020: Postes de concreto armado e protendido para redes de distribuição e de transmissão de energia elétrica – Parte 4: Determinação da absorção de água. NBR 8451-6:2021: Postes de concreto armado e protendido para redes de distribuição e de transmissão de energia elétrica – Parte 6: Postes de concreto armado e protendido para linhas de transmissão e subestações de energia elétrica – Requisitos, padronização e ensaios

<table>
<tr><th>N°</th><th>TITLE</th><th>DESCRIPTION - ENEL BRASIL</th></tr>
<tr><td>7.2</td><td>Local standards</td><td>NBR 12655:2015: Concreto de cimento Portland - Preparo, controle e recebimento – Procedimento
NBR 14643:2001 Corrosão Atmosférica – Classificação da corrosividade de atmosferas.
NBR 7680:2015 Extração, preparo e ensaios de testemunhos de concreto.
NBR 11768:2019 Aditivos químicos para concreto de cimento Portland – Requisitos.
ABNT NBR 7480:2007, Aço destinado a armaduras para estruturas de concreto armado – Especificação</td></tr>
<tr><td>7.3</td><td>Service conditions</td><td>According ABNT NBR 6118 (Table 6.1), CLASS II - CAA - MODERADA</td></tr>
<tr><td>7.4.1</td><td>Manufacturing materials</td><td>
<table>
<tr><th>Material</th><th>Reference Standard</th></tr>
<tr><td>Cement</td><td>ABNT NBR 16697</td></tr>
<tr><td>Aggregates (Gravel)</td><td>NBR 7211</td></tr>
<tr><td>Water</td><td>ABNT NBR 15900-1</td></tr>
<tr><td>Steel</td><td>ABNT NBR 7480</td></tr>
<tr><td>Concrete</td><td>NBR 12655</td></tr>
</table>
</td></tr>
<tr><td>7.4.2</td><td>Dimensions</td><td>HVC type poles main characteristics are shown in Table 1 and in the following Table 2:
<table>
<tr><th>Type</th><th>Description</th><th>Coating (mm)(*1)</th><th>Ultimate design load (*2) (daN)</th><th>Safety Factor</th><th>Failure Load (daN)</th><th>Bending moment (*3)</th></tr>
<tr><td>C-17</td><td>10/300 daN</td><td>≥15</td><td>300</td><td>2</td><td>600</td><td>450</td></tr>
<tr><td>C-19</td><td>10/600 daN</td><td>≥15</td><td>600</td><td>2</td><td>1200</td><td>900</td></tr>
<tr><td>C-23</td><td>10/1000 daN</td><td>≥15</td><td>1000</td><td>2</td><td>2000</td><td>900</td></tr>
<tr><td>C-17</td><td>12/300 daN</td><td>≥15</td><td>300</td><td>2</td><td>600</td><td>450</td></tr>
<tr><td>C-19</td><td>12/600 daN</td><td>≥15</td><td>600</td><td>2</td><td>1200</td><td>900</td></tr>
<tr><td>C-23</td><td>12/1000 daN</td><td>≥15</td><td>1000</td><td>2</td><td>2000</td><td>900</td></tr>
<tr><td>C-33</td><td>12/2000 daN</td><td>≥15</td><td>2000</td><td>2</td><td>4000</td><td>900</td></tr>
<tr><td>C-.43</td><td>12/3000 daN</td><td>≥15</td><td>3000</td><td>2</td><td>6000</td><td>900</td></tr>
<tr><td>C-23</td><td>14/1000 daN</td><td>≥15</td><td>1000</td><td>2</td><td>2000</td><td>900</td></tr>
<tr><td>C-19</td><td>14/600 daN</td><td>≥15</td><td>600</td><td>2</td><td>1200</td><td>900</td></tr>
<tr><td>R-10</td><td>14/2000 daN</td><td>≥15</td><td>2000</td><td>2</td><td>4000</td><td></td></tr>
<tr><td>R-5</td><td>16/1000 daN</td><td>≥15</td><td>1000</td><td>2</td><td>2000</td><td></td></tr>
<tr><td>R-103</td><td>16/2000 daN</td><td>≥15</td><td>2000</td><td>2</td><td>4000</td><td></td></tr>
</table>
Table 2
The other characteristics of the pole shall be compliant with NBR 8451 series.
(*1) Coating end fitting shall be ≥20 mm
(*2) Nominal Stress
(*3) Bending moment according to Table A-1 for NBR 8451.
</td></tr>
</table>

N°	TITLE	DESCRIPTION - ENEL BRASIL
7.4.4	Holes	The arrangement of the holes, for the passing of the grounding conductor, as indicate in clause §7.4.14. The steel reinforcement (Steel bar or mesh of steel wires used as a stress device in reinforced concrete, to strengthen and hold the concrete in stress) must not be visible or uncovered due to the presence of the holes.
7.4.5	Embedment length	For the embedment length following formula shall be applied: He [m] = 0.1·L [m] + 0.6 [m]
7.4.6	Sag	According to ABNT NBR 8451-1(Item 5.4.1); NBR 8451- 2; NBR 8451-3(Item 4.2.6.2). The poles subject to a stress equal to the Ultimate design load (En) at a distance of 0.055 m from the top, should not submit sags above: • 3.5% of the nominal length
7.4.7	Residual Sag	According to ABNT NBR 8451-1(Item 5.4.2); NBR 8451- 2; NBR 8451-3. Residual sag is the sag that remains after removing the stresses. This sag measured after having applied a stress that is equal to 140% of Ultimate design load on the application plane of the real stress, shall not exceed: • 0.35% of the nominal length.
7.4.8	Cracks	According to NBR 8451-1; NBR 8451- 2; NBR 8451-3. All the poles subject to a stress equal to Ultimate design load shall not submit cracks, with the exception of capillary cracks. Cracks that appear during 140% of Ultimate design load (En) and the application of bending moments and nominal vertical load will be less than 0.3 mm. The residual cracks that appear after residual sag shall close or to be capillary.
7.4.9	Ultimate design load (En)	In accordance with Table 2.
7.4.10	Safety factor	This value is obtained by the following formula: $CS = \frac{E_R}{E_n}$ Where: CS: Safety Factor E_R: Failure Load E_n: Ultimate design load Stresses are applied at the plane of real stress, which is located at a distance “d” below of the top of the pole. The safety factor shall be same as **2**.
7.4.11	Grounding or Earthing system	The poles shall have 2 holes for the passing of the grounding conductor, as indicate in ABNT NBR 8451-1 and 8451-2 (Figure B1).

N°	TITLE	DESCRIPTION - ENEL BRASIL
7.4.12	Marking and designation of pole	All poles, according to NBR 8451-1(item 4.1), shall have a labeling which is made on a 55 ±5 x 60 ±6 mm metal plate (NBR 8451-1 item 4.1.2 Fig. A.2) material shall aluminum alloy or stainless steel embedded in the concrete at a height of 2 m above the embedment line, with indelible ink (the application of adhesives is not allowed), containing the following information: • Date of manufacture (yy/mm/dd), • nominal length, • Ultimate design load in daN, • manufacturer´s name, • name of the distribution company, • weight in kg • batch number (ABNT NBR 8451-1 Figure A.1): Optionally: Engraving directly on the concrete, in bas-relief, with depth between 2 mm and 5 mm, legibly and indelibly. The engraving direction should be from bottom to top. All poles also shall submit the following marks: • Mark of feature reference: 3000±50 mm for the Butt.
7.4.14	Design drawing	According to NBR 8451-1 (item 4.4) and 8451-2 (item B1).

<table>
<tr><th>N°</th><th>TITLE</th><th>DESCRIPTION - ENEL BRASIL</th></tr>
<tr><td>7.6.1</td><td>Type Tests</td><td>
<table>
<tr><th>N°</th><th>Test</th><th>Requirement</th><th>Test Method</th></tr>
<tr><td>1</td><td>Concrete additive materials</td><td>See §7.4.1</td><td>According to ABNT NBR 16697</td></tr>
<tr><td>2</td><td>Metal reinforcement steel</td><td>See §7.4.1</td><td>According to ABNT NBR 7480</td></tr>
<tr><td>3</td><td>Compressive resistance of concrete</td><td>See §7.4.1</td><td>According to ABNT NBR 12655</td></tr>
<tr><td>4</td><td>Minimum concrete coating</td><td>15 mm</td><td>According to NBR 8451-3 (item 4.2.9)</td></tr>
<tr><td>5</td><td>Test water absorption index</td><td>a) ≤ 4.0% of the average of the samples
b) ≤ 5.5% to test pole</td><td>According to NBR 8451-1, NBR 8451-4.</td></tr>
<tr><td>6</td><td>Visual and Checking dimensions</td><td>Approved drawings</td><td>Visual Inspection. The tolerances are specified in ABNT NBR 8451-1.</td></tr>
<tr><td>7</td><td>Marking</td><td>See clause §7.4.12</td><td>Visual Inspection. The tolerances are specified in ABNT NBR 8451-2.</td></tr>
<tr><td>8</td><td>Elastic bending test with 100% En</td><td>a) The pole shall not present cracks, except capillary cracks.
b) The sag shall not be higher than indicated in §7.4.6</td><td>1. The pole shall be embedded rigidly at a distance "he", referred in clause 7.4.5.
2. At a distance d = 0.1 m from the top, a force shall be applied gradually up to a value En (Ultimate design load) and maintain this stress for one minute to allow lodging of the embedment.
3. Release the applied load gradually and reapply a stress gradually until to achieve the value En, will maintain this stress for at least 5 minutes.</td></tr>
</table>
</td></tr>
</table>

<table>
<tr><th>N°</th><th>TITLE</th><th>DESCRIPTION - ENEL BRASIL</th></tr>
<tr><td>7.6.1</td><td>Type Tests</td><td>
<table>
<tr><th>N°</th><th>Test</th><th>Requirement</th><th>Test Method</th></tr>
<tr><td>9</td><td>Elastic bending test with 140% En</td><td>a) The pole shall not present cracks, except capillary cracks.
b) The sag shall not be higher than indicated in §7.4.6.
c) Residual sag is the sag that remains after removing the stresses, indicated in §7.4.7.</td><td>1. The pole shall be embedded rigidly at a distance "he", referred in clause 7.4.5.
2. At a distance d = 0.1 m from the top, a strength shall be applied gradually up to a value En and maintain this stress for 5 minutes to allow the accommodation of embedment.
3. Apply a stress gradually until to achieve the value 1.4xEn, will maintain this stress for at least 3 minutes.</td></tr>
<tr><td>10</td><td>Failure Load test</td><td>Failure Load shall be equal or greater than 200% En.</td><td>After the Elastic bending test with 140% En is completed, apply an increasing load until cause the rupture of the pole.</td></tr>
<tr><td>11</td><td>Bending Moment test</td><td>The pole shall not present cracks under specified load.</td><td>According to NBR 8451-3</td></tr>
</table>
</td></tr>
<tr><td>7.6.2</td><td>Acceptance Tests</td><td>
During the acceptance tests carried out independently, the supplier shall apply the following sampling criterion: Double sampling plan for reduced inspection, level II, AQL of 2.5% (ISO 2859-1 Ed V 2007) apply for each type of pole under FAT. The ISO standard requires that up to a quantity of 50 pieces, it is applied single sampling plan for reduced inspection, level II, AQL of 2.5%.
<table>
<tr><th>N.</th><th>Test</th><th>Test Method</th></tr>
<tr><td>1</td><td>Concrete additive materials</td><td>7.6.1.1</td></tr>
<tr><td>2</td><td>Metal reinforcement steel</td><td>7.6.1.2</td></tr>
<tr><td>3</td><td>Compressive resistance of concrete</td><td>7.6.1.3</td></tr>
<tr><td>4</td><td>Minimum concrete coating (a)</td><td>7.6.1.4</td></tr>
<tr><td>5</td><td>Test water absorption index (a)</td><td>7.6.1.5</td></tr>
<tr><td>6</td><td>Visual and Checking dimensions</td><td>7.6.1.6</td></tr>
<tr><td>7</td><td>Marking</td><td>7.6.1.7</td></tr>
<tr><td>8</td><td>Elastic bending test with 100% En</td><td>7.6.1.8</td></tr>
<tr><td>9</td><td>Elastic bending test with 140% En (a)</td><td>7.6.1.9</td></tr>
<tr><td>10</td><td>Failure Load test (a)</td><td>7.6.1.10</td></tr>
<tr><td>11</td><td>Bending Moment test (a)</td><td>7.6.1.11</td></tr>
</table>
(a) The sample size must be one post in every 200 units (NBR4851-1)
The test method and requirement are the same as detailed in section 7.6.1 (Type Tests).
During the repetition of the tests in the presence of the Enel inspector, the sampling is half of the sampling for acceptance tests performed independently by the supplier. For test 3, the Enel inspector will check the results of the test carried out by the accredited laboratory. The certificates of conformity of the raw materials used in the manufacture of the poles must be available to the Enel Group.
</td></tr>
</table>

8.2 LOCAL SECTION - ENEL DISTRIBUCIÓN CHILE

<table>
<tr><th>N°</th><th>TITLE</th><th>DESCRIPTION – ENEL DISTRIBUCIÓN CHILE</th></tr>
<tr><td>7.2</td><td>Local standards</td><td>NCh148:1968: Cemento - Terminología, clasificación y especificaciones generales.
NCh163:1979: Áridos para morteros y hormigones - Requisitos generales
NCh204:2006: Acero - Barras laminadas en caliente para hormigón armado hormigón
NCh205:1968: Acero - Barras reviradas para hormigón armado
NCh170:1985: Hormigón - Requisitos generales
NCh1498:1982: Hormigón – Agua de amasado – Requisitos</td></tr>
<tr><td>7.3.1</td><td>Environmental conditions</td><td>The seismic requirements shall be compliant with ETG-1020.</td></tr>
<tr><td>7.4.1</td><td>Manufacturing materials</td><td>
<table>
<tr><th>Material</th><th>Reference Standard</th></tr>
<tr><td>Cement</td><td>NCh148-68</td></tr>
<tr><td>Aggregates (Gravel)</td><td>NCh163-79</td></tr>
<tr><td>Water</td><td>NCh1498-82</td></tr>
<tr><td>Steel</td><td>NCh204-77
NCh205-69</td></tr>
<tr><td>Concrete</td><td>NCh170-85</td></tr>
</table>
</td></tr>
</table>

<table>
<tr><th>N°</th><th>TITLE</th><th>DESCRIPTION – ENEL DISTRIBUCIÓN CHILE</th></tr>
<tr><td>7.4.2</td><td>Dimensions</td><td>HC/HVC Type poles main characteristics are shown in the Table 1 and in the following Table 3:
<table>
<tr><th>Type</th><th>Description</th><th>Coating (mm)(*1)</th><th>Ultimate design load (daN)</th><th>Safety Factor</th><th>Failure Load (daN)</th><th>Bending moment (*2)</th></tr>
<tr><td>C-17</td><td>10/300 daN</td><td>≥15</td><td>300</td><td>2</td><td>600</td><td>450</td></tr>
<tr><td>C-19</td><td>10/600 daN</td><td>≥15</td><td>600</td><td>2</td><td>1200</td><td>900</td></tr>
<tr><td>C-23</td><td>10/1000 daN</td><td>≥15</td><td>1000</td><td>2</td><td>2000</td><td>900</td></tr>
<tr><td>C-17</td><td>12/300 daN</td><td>≥15</td><td>300</td><td>2</td><td>600</td><td>450</td></tr>
<tr><td>C-19</td><td>12/600 daN</td><td>≥15</td><td>600</td><td>2</td><td>1200</td><td>900</td></tr>
<tr><td>C-23</td><td>12/1000 daN</td><td>≥15</td><td>1000</td><td>2</td><td>2000</td><td>900</td></tr>
<tr><td>C-33</td><td>12/2000 daN</td><td>≥15</td><td>2000</td><td>2</td><td>4000</td><td>900</td></tr>
<tr><td>C-43</td><td>12/3000 daN</td><td>≥15</td><td>3000</td><td>2</td><td>6000</td><td>900</td></tr>
<tr><td>C-17</td><td>14/300 daN</td><td>≥15</td><td>300</td><td>2</td><td>600</td><td>450</td></tr>
<tr><td>C-23</td><td>14/1000 daN</td><td>≥15</td><td>1000</td><td>2</td><td>2000</td><td>900</td></tr>
<tr><td>C-19</td><td>14/600 daN</td><td>≥15</td><td>600</td><td>2</td><td>1200</td><td>900</td></tr>
<tr><td>R-10</td><td>14/2000 daN</td><td>≥15</td><td>2000</td><td>2</td><td>4000</td><td></td></tr>
<tr><td>C-43</td><td>14/3000 daN</td><td>≥15</td><td>3000</td><td>2</td><td>6000</td><td></td></tr>
<tr><td>R-5</td><td>16/1000 daN</td><td>≥15</td><td>1000</td><td>2</td><td>2000</td><td></td></tr>
<tr><td>R-103</td><td>16/2000 daN</td><td>≥15</td><td>2000</td><td>2</td><td>4000</td><td></td></tr>
<tr><td>C-43</td><td>16/3000 daN</td><td>≥15</td><td>3000</td><td>2</td><td>6000</td><td></td></tr>
</table>
Table 3
The other characteristics of the pole shall be compliant with NBR 8451 series.
(*1) Coating end fitting shall be ≥20 mm
(*2) Bending moment according to Table A-1 for NBR 8451.</td></tr>
<tr><td>7.4.4</td><td>Holes</td><td>The arrangement of the holes, for the passing of the grounding conductor, as indicate in clause §7.4.14.
The steel reinforcement must not be visible or uncovered due to the presence of the holes.</td></tr>
<tr><td>7.4.5</td><td>Embedment length</td><td>For the embedment length following formula shall be applied:
He [m] = 0.1·L [m] + 0.6[m].</td></tr>
<tr><td>7.4.6</td><td>Sag</td><td>The poles subject to a stress equal to the Ultimate design load (En) at a distance of 0.055 m from the top, should not submit sags above:
• 3.5% of the nominal length.</td></tr>
</table>

N°	TITLE	DESCRIPTION – ENEL DISTRIBUCIÓN CHILE
7.4.7	Residual Sag	Residual sag is the sag that remains after removing the stresses. This sag measured after having applied a stress that is equal to 140% En on the application plane of the real stress, shall not exceed: • 0.35% of the nominal length.
7.4.8	Cracks	All the poles subject to a stress equal to Ultimate design load shall not submit cracks, with the exception of capillary cracks. Cracks that appear during 140% of Ultimate design load (En) and the application of bending moments and nominal vertical load will be less than 0.3 mm. The residual cracks that appear after residual sag shall close or to be capillary.
7.4.9	Nominal Stress	In accordance with Table 3.
7.4.10	Safety factor	This value is obtained by the following formula: $CS = \frac{E_R}{E_n}$ Where: CS: Safety Factor E_R: Failure Load E_n: Ultimate design load Stresses are applied at the plane of real stress, which is located at a distance “d” below of the top of the pole. The safety factor shall be same as **2**.
7.4.11	Grounding or Earthing system	The poles shall have 2 holes for the passing of the grounding conductor, as indicate in ABNT NBR 8451-1 and 8451-2 (Figure B1).
7.4.12	Marking and designation of pole	All poles, shall have a labeling which is made on a 100x110 mm metal plate (aluminum alloy or stainless steel) embedded in the concrete at a height of 2 m above the embedment line, with indelible ink (the application of adhesives is not allowed), containing the following information: • Date of manufacture (yy/mm/dd), • nominal length, • Ultimate design load in daN, • manufacturer´s name, • name of the distribution company, • weight in kg • batch number All poles also shall submit the following marks: • Mark of feature reference: 3000±50 mm for the Butt.

<table>
<tr><th>N°</th><th>TITLE</th><th>DESCRIPTION – ENEL DISTRIBUCIÓN CHILE</th></tr>
<tr><td>7.6.1</td><td>Type Tests</td><td>
<table>
<tr><th>N°</th><th>Test</th><th>Requirement</th><th>Test Method</th></tr>
<tr><td>1</td><td>Concrete additive materials</td><td>See §7.4.1</td><td>NCh148-68</td></tr>
<tr><td>2</td><td>Metal reinforcement steel</td><td>See §7.4.1</td><td>NCh204-77
NCh205-69</td></tr>
<tr><td>3</td><td>Compressive resistance of concrete</td><td>See §7.4.1</td><td>NCh170-85</td></tr>
<tr><td>4</td><td>Concrete coating</td><td>15 mm</td><td>The test is performed typically after tensile strength verification.
5 points along the pole shall be identified along the pole exposing the reinforcing bar by means of a proper mechanical tool. Consequently, the thickness of the concrete shall be measured in each point with a gauge accurate 1 mm.
This verification may be performed by non-destructive process.</td></tr>
<tr><td>5</td><td>Test water absorption index</td><td>a) ≤ 4.0% of the average of the samples
b) ≤ 5.5% to test pole</td><td>1) The samples for absorption tests are removed after the tensile strength test. From the broken After each broken pole is removed 4 concrete blocks without apparent cracks, whose linear dimensions are four to ten times greater than the maximum diameter of the aggregate used in the production of concrete.
2) Samples are marked with the same number or identification mark of the poles that were removed. (Continue below)</td></tr>
</table>
</td></tr>
</table>

N°	TITLE	DESCRIPTION – ENEL DISTRIBUCIÓN CHILE
7.6.1	Type Tests	

N°	Test	Requirement	Test Method
	Test water absorption index		3) The samples are immersed in water, in a suitable vessel, at ambient temperature, for a minimum 30h, or until constant weight is maintained, that is, when 2 (two) successive weighing indicate an increase not higher than 0.1% of its original weight. Once removed from the water, drained for a 1 min and having removed the surface water carefully using a dry cloth, the sample shall be weighed immediately. After weighing, will dry at a temperature between 70 ° C and 80 ° C until 2 (two) successive weighing, with a minimum interval of 2 h, indicate a weight loss of no more than 0.1% of its original weight. 4) If the samples shown pieces of rebar, considerations of the results shall be determined and shall reduce its weight. 5) The difference in weight of the sample after immersion and after drying, expressed in percentages by weight of the dry sample, shall be the absorption index. 6) The absorption index of a pole in percentage is the arithmetic mean of the values obtained with the samples removed from the same pole.
6	Checking dimensions	Approved drawings	Visual Inspection. Tolerances according to the approval drawings.
7	Marking	See clause §7.4.12	Visual Inspection.

N°	TITLE	DESCRIPTION – ENEL DISTRIBUCIÓN CHILE

N°	Test	Requirement	Test Method
8	Elastic bending test with 100% En	a) The pole shall not present cracks, except capillary cracks. b) The sag shall not be higher than indicated in §7.4.6	1. The pole shall be embedded rigidly at a distance "he", referred in clause 7.4.5. 2. At a distance d = 0.1 m from the top, a force shall be applied gradually up to a value En (Ultimate design load) and maintain this stress for one minute to allow lodging of the embedment. 3. Release the applied load gradually and reapply a stress gradually until to achieve the value En, will maintain this stress for at least 5 minutes.
9	Elastic bending test with 140% En	a) The pole shall not present cracks, except capillary cracks. b) The sag shall not be higher than indicated in §7.4.6. c) Residual sag is the sag that remains after removing the stresses, indicated in §7.4.7.	1. The pole shall be embedded rigidly at a distance "he", referred in clause 7.4.5. 2. At a distance d = 0.1 m from the top, a strength shall be applied gradually up to a value En and maintain this stress for 5 minutes to allow the accommodation of embedment. 3. Apply a stress gradually until to achieve the value 1.4xEn, will maintain this stress for at least 3 minutes.
10	Failure Load test	Failure Load shall be equal or greater than 200% En.	After the Elastic bending test with 140% rated load is completed, apply an increasing load until cause the rupture of the pole.
11	Bending Moment test	The pole shall not present cracks under specified load.	According to NBR 8451-3

<table>
<tr><th>N°</th><th>TITLE</th><th>DESCRIPTION – ENEL DISTRIBUCIÓN CHILE</th></tr>
<tr><td>7.6.2</td><td>Acceptance Tests</td><td>
During the acceptance tests carried out independently, the supplier shall apply the following sampling criterion: Double sampling plan for reduced inspection, level II, AQL of 2.5% (ISO 2859-1 Ed V 2007) apply for each type of pole under FAT. The ISO standard requires that up to a quantity of 50 pieces, it is applied single sampling plan for reduced inspection, level II, AQL of 2.5%.
<table>
<tr><th>N.</th><th>Test</th><th>Test Method</th></tr>
<tr><td>1</td><td>Concrete additive materials</td><td>7.6.1.1</td></tr>
<tr><td>2</td><td>Metal reinforcement steel</td><td>7.6.1.2</td></tr>
<tr><td>3</td><td>Compressive resistance of concrete</td><td>7.6.1.3</td></tr>
<tr><td>4</td><td>Minimum concrete coating (a)</td><td>7.6.1.4</td></tr>
<tr><td>5</td><td>Test water absorption index (a)</td><td>7.6.1.5</td></tr>
<tr><td>6</td><td>Visual and Checking dimensions</td><td>7.6.1.6</td></tr>
<tr><td>7</td><td>Marking</td><td>7.6.1.7</td></tr>
<tr><td>8</td><td>Elastic bending test with 100% En</td><td>7.6.1.8</td></tr>
<tr><td>9</td><td>Elastic bending test with 140% En</td><td>7.6.1.9</td></tr>
<tr><td>10</td><td>Failure Load test (a)</td><td>7.6.1.10</td></tr>
<tr><td>11</td><td>Bending Moment test (a)</td><td>7.6.1.11</td></tr>
</table>
(a) The sample size must be one post in every 200 units
The test method and requirement are the same as detailed in section 7.6.1 (Type Tests).
During the repetition of the tests in the presence of the Enel inspector, the sampling is half of the sampling for acceptance tests performed independently by the supplier. For test 3, the Enel inspector will check the results of the test carried out by the accredited laboratory.
The certificates of conformity of the raw materials used in the manufacture of the poles must be available to the Enel Group.
</td></tr>
<tr><td>7.4.14</td><td>Design Drawing</td><td>According to NBR 8451-1 (item 4.4) and 8451-2 (item B1).</td></tr>
</table>

8.3 CODENSA (COLOMBIA)

<table>
<tr><th>N°</th><th>TITLE</th><th>DESCRIPTION - CODENSA</th></tr>
<tr><td>7.2</td><td>Local standards</td><td>NTC 30: Cemento portland. Clasificación y nomenclatura.
NTC 121: Ingeniería civil y arquitectura. cemento portland. Especificaciones físicas y mecánicas.
NTC 321: Ingeniería civil y arquitectura. Cemento portland. Especificaciones
NTC 174: Concretos. Especificaciones de los agregados para concreto.
NTC 2: Ensayo de tracción para productos de acero
NTC 116: Alambre duro de acero para refuerzo de concreto.
NTC 159: Alambres de acero sin recubrimiento liberados de esfuerzo para concreto pretensado.
NTC 161: Barras lisas de acero al carbono para hormigón armado.
NTC 248: Barras y rollos corrugados de acero al carbono para hormigón armado.
NTC 673: Ensayo de resistencia a la compresión, de cilindros normales de hormigón.
NTC 1299: Aditivos químicos para el hormigón.
NTC 2010: Torones de acero de siete alambres sin recubrimiento para concreto pretensado.
NTC 1329: Prefabricados en concreto. postes de concreto para líneas de energía eléctrica y telecomunicaciones.
RETIE: Reglamento técnico de instalaciones eléctricas.</td></tr>
<tr><td>7.5.1</td><td>Classification</td><td>It is the pole which steel reinforcement bar has been pre-stressed. This initial prestressed steel should not be transferred to the concrete until it no longer has strength of 245 kg/cm2 and before tensioning losses occur.
The minimum resistance to compression of concrete shall be 245kg/cm² (3 500 psi) for conventional poles and 350 kg/cm² (5 000 psi) for pre-stressed poles. This resistance shall be verified through laboratory tests on sections taken from different lots according to standard NTC 673.
The minimum strength of steel shall be 4218 kg / cm² (60000psi) and shall not exceed 0.94 at the time of initial pre-tensioning. Steel spirals or rings shall be made of smooth or corrugated rods of 6.4 mm minimum diameter.
Other specific requirements must comply with the clause 5 of the NTC1329 standard.</td></tr>
<tr><td>7.4.1</td><td>Manufacturing materials</td><td><table>
<tr><th>Material</th><th>Reference Standard</th></tr>
<tr><td>Cement</td><td>NTC 030, NTC 121, NTC 321</td></tr>
<tr><td>Aggregates (Gravel)</td><td>NTC 174</td></tr>
<tr><td>Water</td><td>NTC 3459</td></tr>
<tr><td>Steel</td><td>NTC 2, NTC 116, NTC 159, NTC 161, NTC 2010, NTC 248</td></tr>
<tr><td>Concrete</td><td>NTC 673 NTC 1299</td></tr>
</table></td></tr>
</table>

N°	TITLE	DESCRIPTION - CODENSA
7.4.2	Dimensions	HC/HVC Type poles main characteristics are shown in Table 1.
7.4.4	Holes	Poles shall have two holes with a diameter of 20 mm, and with an inclination respect to the horizontal plane of about 45° located respectively at a distance of 20 cm below the top and 50 cm below the embedment line. The steel reinforcement must not be visible or uncovered due to the presence of the holes.
7.4.5	Embedment length	For the embedment length following formula shall be applied: He [m] = 0.1·L [m] + 0.6 [m]
7.4.6	Sag	The poles subjected to a stress equal to the Ultimate design load (En) at a distance of 0.20m from the top, should not submit sags above: 3.0% of the free length of the pole (L-he)
7.4.7	Residual Sag	The poles subjected to a stress equal to the Ultimate design load (En) at a distance of 0.20m from the top, should not submit sags above: 0.15% of the free length of the pole (L-he)
7.4.8	Cracks	All the poles subject to a stress equal to Ultimate design load shall not submit cracks, with the exception of capillary cracks (width ≤0.2 mm).
7.4.9	Nominal Stress	In accordance with Table 1.
7.4.10	Safety factor	This value is obtained by the following formula: $CS = \frac{E_R}{E_n}$ Where: CS: Safety Factor E_R: Failure Load E_n: Ultimate design load Stresses are applied at the plane of real stress, which is located at a distance “d” below of the top of the pole. The safety factor shall be same as **2,5**.
7.4.11	Grounding or Earthing system	According NTC1329. The pole must have a plate or other metallic element with a section not less than 78 mm2, located 1,5 above the embedment length, which serves as an electrical contact between the steel of the pole frame and the external grounding connection.
7.4.12	Marking and designation of pole	All poles shall have a labeling which is made on a 120x70 mm metal plate (aluminum alloy or stainless steel) embedded in the concrete at a height of 2 m above the embedment line, with indelible ink (the application of adhesives is not allowed), comply with NTC 1329 standard, containing the following information: • Date of manufacture (yy/mm/dd), • Nominal length, • Ultimate design load in daN, • manufacturer´s name, • name of the distribution company, • weight in kg • batch number

7.6.1	Type Tests	N°	Test	Requirement	Test Method
		1	Concrete additive materials	See §7.4.1	NTC 673 NTC 1299
		2	Metal reinforcement steel	See §7.4.1	NTC 2, NTC 116, NTC 159, NTC 161, NTC 2010, NTC 248
		3	Compressive resistance of concrete	See §7.4.1	According to 6.2 NTC1329
		4	Concrete coating	20mm	The test is performed typically after tensile strength verification. 5 points along the pole shall be identified along the pole exposing the reinforcing bar by means of a proper mechanical tool. Consequently, the thickness of the concrete shall be measured in each point with a gauge accurate 1 mm. This verification may be performed by non-destructive process.
		5	Test water absorption index	a) 6% of the average of the samples b) 7.5% to test pole	1) The samples for absorption tests are removed after the tensile strength test. From the broken After each broken pole is removed 4 concrete blocks without apparent cracks, whose linear dimensions are four to ten times greater than the maximum diameter of the aggregate used in the production of concrete. 2) Samples are marked with the same number or identification mark of the poles that were removed 3) The samples are immersed in water, in a suitable vessel, at ambient temperature, for a minimum 30h, or until constant weight is maintained, that is, when 2 (two) successive weighing indicate an increase not higher than 0.1% of its original weight. Once removed from the water, drained for a 1 min and having removed the surface water carefully using a dry cloth, the sample shall be weighed immediately. After weighing, will dry at a temperature between 70 ° C and 80 ° C until 2 (two) successive weighing, with a minimum interval of 2 h, indicate a weight loss of no more than 0.1% of its original weight. 4) If the samples shown pieces of rebar, considerations of the results shall be determined and shall reduce its weight. 5) The difference in weight of the sample after immersion and after drying, expressed in percentages by weight of the dry sample, shall be the absorption index. 6) The absorption index of a pole in percentage is the arithmetic mean of the values obtained with the samples removed from the same pole.

N°	Test	Requirement	Test Method
6	Visual inspection and Checking dimensions	Approved drawings	Visual Inspection according 6.1.1 NTC1329. Tolerances according to NTC1329.
7	Marking	See clause §7.4.12	Visual inspection
8	Elastic bending test with 100% En	a) The pole shall not present cracks, except capillary cracks. b) The sag shall not be higher than indicated in §7.4.6. c) The residual sag shall not be higher than indicated in §7.4.7.	According to NTC1329 The pole, under the action of a load applied at a distance d= 0.2 m from the top, with a value En (Ultimate design load), must not produce a sag greater than 3% of the free length of the pole (L-d), and at the end of the action of that load, the residual sag must not exceed 0.15% of the free length of the pole (L-d).
9	Failure Load test	Failure load shall be equal or greater than 250% nominal stress	According to NTC1329 Proceed similarly to the Elastic bending test with 100% En but this time using a higher stress than “En” until cause the rupture of the pole.
10	Compressive strength test		According to clause 5.1 of NTC1329 standard.
11	Earthing system verification		Consist in checking the electrical continuity of the connection between the steel of the pole frame and the external plate (8.3.12). It is performed applying a voltage between the cap and the insert to permit the current flow of not less than 20 A, so that the ratio between the applied voltage, expressed in volts, and the effective current, in amperes is not greater than 0.05 ohms.

<table>
<tr><th>N°</th><th>TITLE</th><th>DESCRIPTION - CODENSA</th></tr>
<tr><td>7.6.2</td><td>Acceptance Tests</td><td>
During the acceptance tests carried out independently, the supplier shall apply the following sampling criterion: Double sampling plan for reduced inspection, level II, AQL of 2.5% (ISO 2859-1 Ed V 2007) apply for each type of pole under FAT. The ISO standard requires that up to a quantity of 50 pieces, it is applied single sampling plan for reduced inspection, level II, AQL of 2.5%.
<table>
<tr><th>N.</th><th>Test</th><th>Test Method</th></tr>
<tr><td>1</td><td>Concrete additive materials</td><td>7.6.1.1</td></tr>
<tr><td>2</td><td>Metal reinforcement steel</td><td>7.6.1.2</td></tr>
<tr><td>3</td><td>Compressive resistance of concrete</td><td>7.6.1.3</td></tr>
<tr><td>4</td><td>Minimum concrete coating (a)</td><td>7.6.1.4</td></tr>
<tr><td>5</td><td>Test water absorption index (a)</td><td>7.6.1.5</td></tr>
<tr><td>6</td><td>Visual inspection and Checking dimensions</td><td>7.6.1.6</td></tr>
<tr><td>7</td><td>Marking</td><td>7.6.1.7</td></tr>
<tr><td>8</td><td>Elastic bending test with 100% En</td><td>7.6.1.8</td></tr>
<tr><td>9</td><td>Failure Load test (a)</td><td>7.6.1.9</td></tr>
<tr><td>10</td><td>Earthing system verification</td><td>7.6.1.11</td></tr>
</table>
(a) The sample size must be one post in every 200 units
The test method and requirement are the same as detailed in section 7.6.1 (Type Tests).
During the repetition of the tests in the presence of the Enel inspector, the sampling is half of the sampling for acceptance tests performed independently by the supplier. For test 3, the Enel inspector will check the results of the test carried out by the accredited laboratory.
The certificates of conformity of the raw materials used in the manufacture of the poles must be available to the Enel Group.
</td></tr>
<tr><td>7.4.14</td><td>Design Drawing</td><td>According to NTC1329</td></tr>
</table>

8.4 ENEL DISTRIBUCIÓN PERÚ

<table>
<tr><th>N°</th><th>TITLE</th><th>DESCRIPTION – ENEL DISTRIBUCIÓN PERÚ</th></tr>
<tr><td>7.2</td><td>Local standards</td><td>NTP 334.009: CEMENTOS. Cemento Portland. Requisitos. 5a. Ed.
NTP 334.090: CEMENTOS. Cementos Portland adicionados. Requisitos. 5a. ed.
NTP 334.082: CEMENTOS. Cemento Portland. Especificación de la Performance. 3a. ed.
NTP 400.037: AGREGADOS. Agregados para concreto. Requisitos. 4ª Edición
NTP 400.012: AGREGADOS. Análisis granulométrico del agregado fino, grueso y global
NTP 339.088: CONCRETO. Agua de mezcla utilizada en la producción de concreto de cemento Portland. Requisitos
NTP 341.031: HORMIGÓN (CONCRETO). Barras de acero al carbono con resaltes y lisas para hormigón (concreto) armado. Especificaciones
NTP 341.032: Tochos, palanquillas, planchones y llantones de acero al carbono para laminar productos de uso estructural. 1ª Edición
NTP 339.034: HORMIGÓN (Concreto). Método de ensayo normalizado para la determinación de la resistencia a la compresión del concreto, en muestras cilíndricas. 3a. ed.
NTP 339.059: CONCRETO. Método de ensayo normalizado para la obtención y ensayo de corazones diamantinos y vigas seccionadas de concreto. 3a ed
NTP 339.088: HORMIGÓN (CONCRETO). Agua de mezcla utilizada en la producción de concreto de cemento Portland. Requisitos
NTP 339.027: HORMIGON (CONCRETO). Postes de hormigón (concreto) armado para líneas aéreas. 2a. ed.
NTP 339.187: HORMIGÓN (CONCRETO). Método de ensayo normalizado para determinar la densidad, absorción y porcentaje de vacíos en el hormigón (concreto) endurecido
Norma Técnica E.030 Diseño Sismoresistente del RNE (Reglamento Nacional de Edificaciones)</td></tr>
<tr><td>7.3.1</td><td>Environmental conditions</td><td>The seismic requirements shall be compliant with E.030 Diseño sismoresistente del RNE</td></tr>
<tr><td>7.4.1</td><td>Manufacturing materials</td><td><table>
<tr><th>Material</th><th>Reference Standards</th></tr>
<tr><td>Cement</td><td>NTP 334.009, NTP 334.090, NTP 334.082</td></tr>
<tr><td>Aggregates (Gravel)</td><td>NTP 400.037, NTP 400.012</td></tr>
<tr><td>Water</td><td>NTP 339.088</td></tr>
<tr><td>Steel</td><td>NTP 341.031, NTP 341.032</td></tr>
<tr><td>Concrete</td><td>NTP 339.034, NTP 339.059, NTP 339.088, NTP 339.027, NTP 339.187</td></tr>
</table></td></tr>
</table>

<table>
<tr><th>N°</th><th>TITLE</th><th>DESCRIPTION – ENEL DISTRIBUCIÓN PERÚ</th></tr>
<tr><td>7.4.2</td><td>Dimensions</td><td>HC Type poles main characteristics are shown in the following in Table 4.
<table>
<tr><th>Nominal Length (m)</th><th>Distribution Network</th><th>Description</th><th>Top Diameter (mm)</th><th>Butt Diameter (mm)</th><th>Conicity (mm/m)</th><th>Coating (mm)</th></tr>
<tr><td>8</td><td>LV</td><td>8/200/2/150/270</td><td>150</td><td>270</td><td>15</td><td>20</td></tr>
<tr><td>8</td><td>LV</td><td>8/ 600/2/210/330</td><td>210</td><td>330</td><td>15</td><td>25</td></tr>
<tr><td>10</td><td>LV</td><td>10/300/2/150/300</td><td>150</td><td>300</td><td>15</td><td>25</td></tr>
<tr><td>10</td><td>LV</td><td>10/600/2/210/360</td><td>210</td><td>360</td><td>15</td><td>25</td></tr>
<tr><td>12</td><td>LV</td><td>12/300/2/150/330</td><td>150</td><td>330</td><td>15</td><td>25</td></tr>
<tr><td>12</td><td>LV</td><td>12/600/2/210/390</td><td>210</td><td>390</td><td>15</td><td>25</td></tr>
<tr><td>14</td><td>MV / LV</td><td>14/300/2,5/180/390</td><td>180</td><td>390</td><td>15</td><td>30</td></tr>
<tr><td>14</td><td>MV / LV</td><td>14/600/2,5/210/420</td><td>210</td><td>420</td><td>15</td><td>30</td></tr>
<tr><td>14</td><td>MV / LV</td><td>14/800/2,5/240/450</td><td>240</td><td>450</td><td>15</td><td>30</td></tr>
<tr><td>14</td><td>MV / LV</td><td>14/2000/2,5/330/540</td><td>330</td><td>540</td><td>15</td><td>30</td></tr>
<tr><td>16</td><td>MV / LV</td><td>16/300/2,5/180/420</td><td>180</td><td>420</td><td>15</td><td>30</td></tr>
<tr><td>16</td><td>MV / LV</td><td>16/600/2,5/210/450</td><td>210</td><td>450</td><td>15</td><td>30</td></tr>
<tr><td>16</td><td>MV / LV</td><td>16/800/2,5/240/480</td><td>240</td><td>480</td><td>15</td><td>30</td></tr>
<tr><td>16</td><td>MV / LV</td><td>16/2000/2,5/330/570</td><td>330</td><td>570</td><td>15</td><td>30</td></tr>
</table>
Table 4</td></tr>
<tr><td>7.4.3</td><td>Finished pole</td><td>All posts must have 25mm x 45 ° chamfers at the base edges</td></tr>
<tr><td>7.4.4</td><td>Holes</td><td>The holes will have with a minimum diameter of 20 mm for LV and 22mm for MV/LV.
The steel reinforcement must not be visible or uncovered due to the presence of the holes. The holes must be protected with a PVC-SAP pipe.
The steel reinforcement must not be visible or uncovered due to the presence of the holes.
Details are shown in Figure 3 and Figure 4.</td></tr>
<tr><td>7.4.5</td><td>Embedment length</td><td>Two embedment length shall be provided
- he1 = 0.1L, where L are meters
- he2 = 0.1L + 0,5 [m], where L are meters.</td></tr>
<tr><td>7.4.6</td><td>Sag</td><td>The poles subject to a stress equal to the allowable load (En), at a distance of 0.15 m from the top, should not submit sags above 5% of the nominal length.</td></tr>
<tr><td>7.4.7</td><td>Residual sag</td><td>According to Ntp339027.
Residual sag is the sag that remains after removing the 50% of Failure load (Er). This sag, shall not exceed:
• 5% of the maximum sag measured during the Elastic bending test with 50% of Failure load.</td></tr>
</table>

N°	TITLE	DESCRIPTION – ENEL DISTRIBUCIÓN PERÚ
7.4.8	Cracks	According to Ntp339027 Cracks shall have widths less than 0.3 mm.
7.4.9	Nominal Stress	In accordance with Table 4.
7.4.10	Safety factor	This value is obtained by the following formula: $CS = \frac{E_R}{E_n}$ Where: CS: Safety Factor E_R: Failure Load E_n: Ultimate design load Stresses are applied at the plane of real stress, which is located at a distance “d” below of the top of the pole. The safety factor shall be same as **2** for poles used in LV network and **2,5** for poles used in LV network.
7.4.12	Marking and designation of pole	The poles shall submit a identification labeled metal plate (aluminum alloy or stainless steel) embedded in the concrete, legibly and indelibly, located according to design show in figure 3 and figure 4. He lettering will be in low relief, painted black., containing the following information: • Date of manufacture, • manufacturer´s name, • name of the distribution company, • nominal length, in m • ultimate design load in daN, • safety factor • top diameter and butt diameter in mm • batch number

<table>
<tr><th>N°</th><th>TITLE</th><th>DESCRIPTION – ENEL DISTRIBUCIÓN PERÚ</th></tr>
<tr><td>7.6.1</td><td>Type Tests</td><td>
<table>
<tr><th>N°</th><th>Test</th><th>Requirement</th><th>Test Method</th></tr>
<tr><td>1</td><td>Concrete additive materials</td><td>See §7.4.1</td><td>NTP 339.027</td></tr>
<tr><td>2</td><td>Metal reinforcement steel</td><td>See §7.4.1</td><td>NTP 339.027</td></tr>
<tr><td>3</td><td>Compressive resistance of concrete</td><td>See §7.4.1</td><td>NTP 339.027</td></tr>
<tr><td>4</td><td>Concrete coating</td><td>• 25 mm for poles with top diameter up to 150 mm
• 30 mm for poles with top diameter over 150 mm</td><td>The test is performed typically after Failure Load test.
5 points along the pole shall be identified along the pole exposing the reinforcing bar by means of a proper mechanical tool. Consequently, the thickness of the concrete shall be measured in each point with a gauge accurate 1 mm.
This verification may be performed by non-destructive process.</td></tr>
<tr><td>5</td><td>Test water absorption index</td><td>a) ≤ 4.0% of the average of the samples
b) ≤ 5.5% to test pole</td><td>1) The samples for absorption tests are removed after the tensile strength test. From the broken After each broken pole is removed 4 concrete blocks without apparent cracks, whose linear dimensions are four to ten times greater than the maximum diameter of the aggregate used in the production of concrete.
2) Samples are marked with the same number or identification mark of the poles that were removed.
3) The samples are immersed in water, in a suitable vessel, at ambient temperature, for a minimum 30h, or until constant weight is maintained, that is, when 2 (two) successive weighing indicate an increase not higher than 0.1% of its original weight. Once removed from the water, drained for a 1 min and having removed the surface water carefully using a dry cloth, the sample shall be weighed immediately. After weighing, will dry at a temperature between 70 ° C and 80 ° C until 2 (two) successive weighing, with a minimum interval of 2 h, indicate a weight loss of no more than 0.1% of its original weight. (Continue below)</td></tr>
</table>
</td></tr>
</table>

<table>
<tr><th>N°</th><th>TITLE</th><th>DESCRIPTION – ENEL DISTRIBUCIÓN PERÚ</th></tr>
<tr><td>7.6.1</td><td>Type Tests</td><td>
<table>
<tr><th>N°</th><th>Test</th><th>Requirement</th><th>Test Method</th></tr>
<tr><td>5</td><td>Test water absorption index</td><td>a) ≤ 4.0% of the average of the samples
b) ≤ 5.5% to test pole</td><td>4) If the samples shown pieces of rebar, considerations of the results shall be determined and shall reduce its weight.
5) The difference in weight of the sample after immersion and after drying, expressed in percentages by weight of the dry sample, shall be the absorption index.
6) The absorption index of a pole in percentage is the arithmetic mean of the values obtained with the samples removed from the same pole.</td></tr>
<tr><td>6</td><td>Visual inspection</td><td>Approved drawings</td><td>Visual Inspection and tolerances according to NTP 339.027.</td></tr>
<tr><td>7</td><td>Marking</td><td>See clause §7.4.12</td><td>Visual Inspection. According to NTP 339.027</td></tr>
<tr><td>8</td><td>Elastic bending test with 50% Failure load</td><td>a) The pole shall not present cracks, except capillary cracks.
The residual sag shall not be higher than indicated in §7.4.7</td><td>1) The pole will be placed in a horizontal position and rigidly fixed throughout its embedment section he1, taking the necessary precautions to nullify the effects of its own weight. By prior agreement, the test will be carried out in a vertical position, in which case the necessary precautions will be taken to nullify the effects of the wind.
2) At a distance d = 0.15 m from the top, the pole will be subjected to a progressive load applied in a normal direction to the axis and the sags, corresponding to increments of 10% of the nominal failure load, will be recorded, until reaching 50% of tensile strength.
3) The load will be gradually reduced to zero and the post will be subjected to a series of oscillations, executed manually, with no more than 15 cm of amplitude on each side of the axis of the deformed post to overcome the stresses acting on the sliding supports. Once the post is stabilized, the deformation will be measured.</td></tr>
<tr><td>9</td><td>Failure Load test</td><td>This value shall be equal or greater than 200% En for LV Overhead Lines poles and 250% En for MV Overhead Lines poles.</td><td>The pole will be subjected to a progressive load applied in a normal direction to the axis until reaching 60% of the nominal failure load and this load will continue to be applied in 5% increments until the failure of the post occurs. Sags will be measured after holding each load increment for at least 2 minutes.</td></tr>
</table>
</td></tr>
<tr><td></td><td></td><td></td></tr>
</table>

<table>
<tr><th>N°</th><th>TITLE</th><th>DESCRIPTION – ENEL DISTRIBUCIÓN PERÚ</th></tr>
<tr><td>7.6.2</td><td>Acceptance Tests</td><td>
During the acceptance tests carried out independently, the supplier shall apply the following sampling criterion: Double sampling plan for reduced inspection, level II, AQL of 2.5% (ISO 2859-1 Ed V 2007) apply for each type of pole under FAT. The ISO standard requires that up to a quantity of 50 pieces, it is applied single sampling plan for reduced inspection, level II, AQL of 2.5%.
<table>
<tr><th>N.</th><th>Test</th><th>Test Method</th></tr>
<tr><td>1</td><td>Concrete additive materials</td><td>7.6.1.1</td></tr>
<tr><td>2</td><td>Metal reinforcement steel</td><td>7.6.1.2</td></tr>
<tr><td>3</td><td>Compressive resistance of concrete</td><td>7.6.1.3</td></tr>
<tr><td>4</td><td>Concrete coating (a)</td><td>7.6.1.4</td></tr>
<tr><td>5</td><td>Test water absorption index (a)</td><td>7.6.1.5</td></tr>
<tr><td>6</td><td>Visual inspection</td><td>7.6.1.6</td></tr>
<tr><td>7</td><td>Marking</td><td>7.6.1.7</td></tr>
<tr><td>8</td><td>Elastic bending test with 50% Failure load</td><td>7.6.1.8</td></tr>
<tr><td>9</td><td>Failure Load test (a)</td><td>7.6.1.9</td></tr>
</table>
(a) The sample size must be one post in every 200 units
The test method and requirement are the same as detailed in section 7.6.1 (Type Tests).
During the repetition of the tests in the presence of the Enel inspector, the sampling is half of the sampling for acceptance tests performed independently by the supplier. For test 3, the Enel inspector will check the results of the test carried out by the accredited laboratory.
The certificates of conformity of the raw materials used in the manufacture of the poles must be available to the Enel Group.
</td></tr>
</table>

N°	TITLE	DESCRIPTION – ENEL DISTRIBUCIÓN PERÚ
7.4.14	Design Drawing	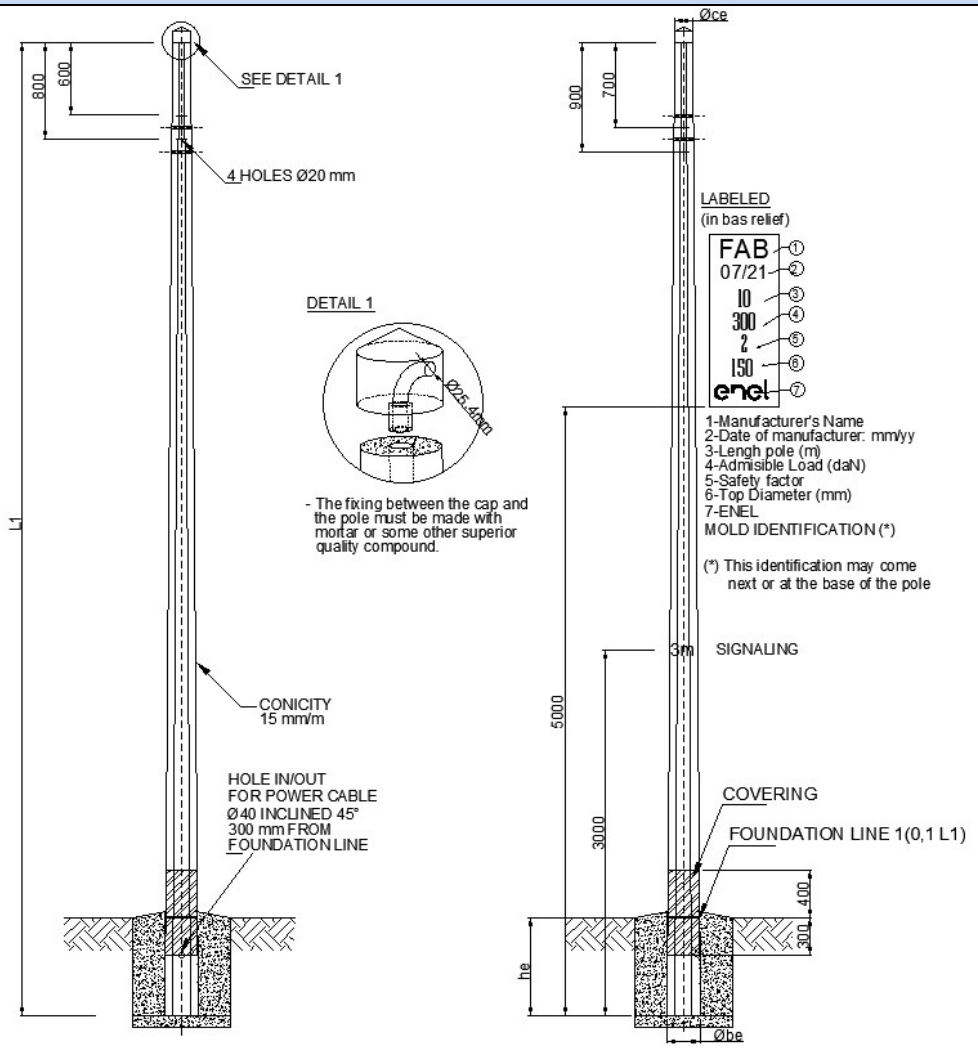 Figure 3: Centrifuged Concrete Pole – Low Voltage Overhead Lines

N°	TITLE	DESCRIPTION – ENEL DISTRIBUCIÓN PERÚ
7.4.14	Design Drawing	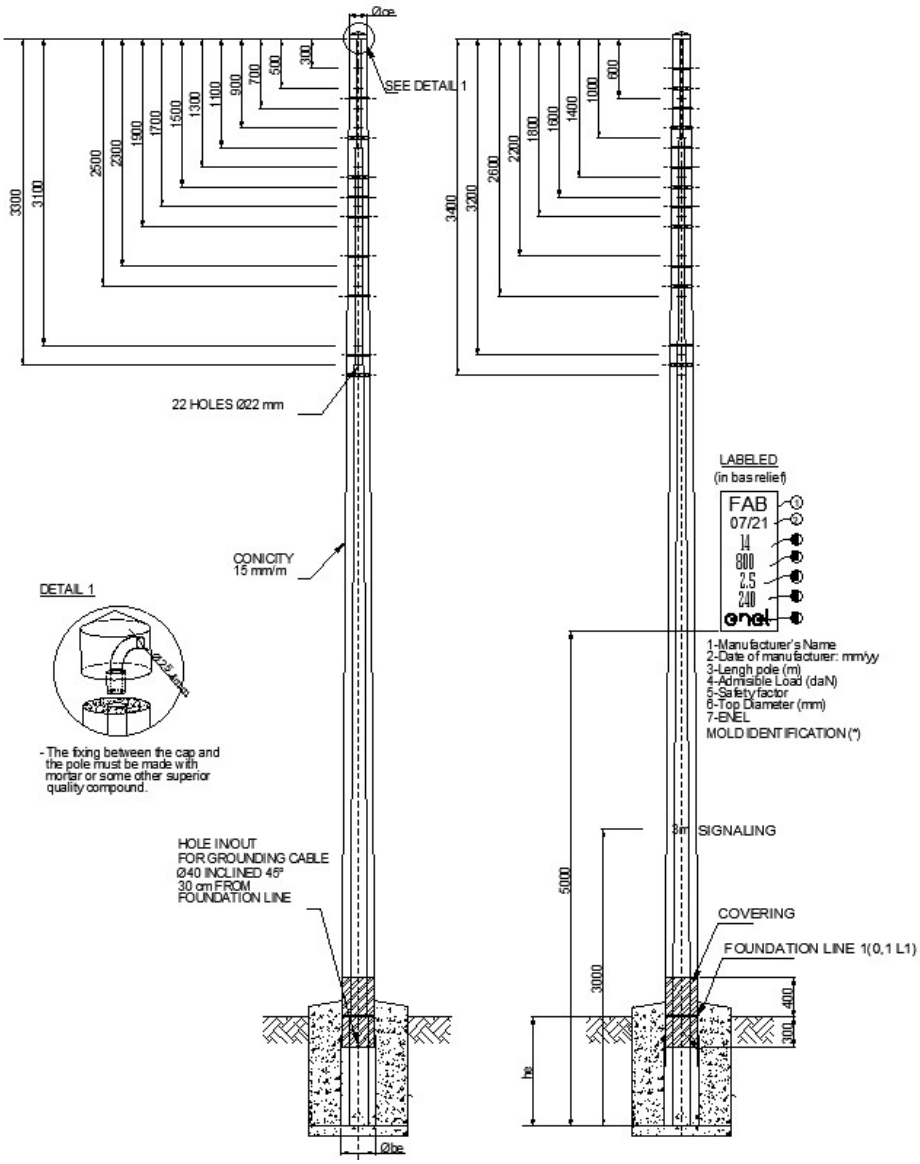 Figure 4: Centrifuged Concrete Pole – Medium Voltge Overhead Lines

8.5 EDESUR (ARGENTINA)

N°	TITLE	DESCRIPTION - EDESUR
7.2	Local standards	IRAM 50000: Cemento para uso general. Composición, características, evaluación de la conformidad y condiciones de recepción. IRAM 50001: Cemento. Cementos con propiedades especiales. IRAM 1512: Agregado fino para hormigón de cemento. Requisitos. IRAM 1531: Agregado grueso para hormigón de cemento. Requisitos IRAM 1627: Agregados. Granulometría de los agregados para hormigones. IRAM 1634: Hormigón de cemento. Método de ensayo de compresión. IRAM 1585: Elementos estructurales de hormigón. Sistema constructivo de la toma de tierra en elementos de hormigón armado o pretensado para soporte de instalaciones aéreas. IRAM 1601: Agua para morteros y hormigones de cemento. IRAM 1605: Postes de hormigón pretensado, de sección anular y forma troncocónica, para soporte de instalaciones aéreas. IRAM 1663: Hormigón de cemento. Aditivos químicos. IRAM 15: Inspección por atributos. Planes de muestra única, doble o múltiple, con rechazo. IRAM 18: Muestreo al azar. IRAM-IAS U500-03: Cordones de siete alambres de acero para estructuras de hormigón pretensado. IRAM-IAS U500-07: Cordones de dos o tres alambres de acero para estructuras de hormigón pretensado. IRAM-IAS U500-26: Alambres de acero para armadura en estructuras de hormigón. IRAM-IAS U500-207: Barras de acero conformadas de dureza natural soldables, para armadura en estructuras de hormigón. IRAM-IAS U500-245: Alambres de acero conformado para estructuras de hormigón pretensado. IRAM-IAS U500-502: Barras de acero laminadas en caliente, lisas y de sección circular para armadura en estructuras de hormigón. IRAM-IAS U500-517: Alambres para hormigón pretensado. IRAM-IAS U500-528: Barras de acero conformadas de dureza natural, para armadura en estructuras de hormigón. IRAM 1666-1: Hormigón de cemento Portland. Hormigón elaborado. Requisitos, inspección y recepción y métodos de ensayo. AEA95201 - Edición 2003: Asociación Electrotécnica Argentina: Reglamentación de líneas aéreas exteriores de baja tensión. AEA95301 - Edición 2007: Asociación Electrotécnica Argentina: Reglamentación de líneas aéreas exteriores de media y alta tensión. CIRSOC 201: Proyecto, cálculo y ejecución de estructuras de hormigón armado y pretensado. Edición julio1982. Actualización 1984

<table>
<tr><th>N°</th><th>TITLE</th><th>DESCRIPTION - EDESUR</th></tr>
<tr><td>7.5.1</td><td>Classification</td><td>At the time of applying the force of pre-compression, compression stresses in the concrete should not exceed 50% of the characteristic strength of concrete at the age.</td></tr>
<tr><td>7.4.1</td><td>Manufacturing materials</td><td>
<table>
<tr><th>Material</th><th>Reference Standards</th></tr>
<tr><td>Cement</td><td>IRAM 50000, IRAM 50001</td></tr>
<tr><td>Aggregates (Gravel)</td><td>IRAM 50000, IRAM 50001</td></tr>
<tr><td>Water</td><td>IRAM 1627</td></tr>
<tr><td>Steel</td><td>IRAM-IAS U500-003, IRAM-IAS U500-007, IRAM-IAS U500-026, IRAM-IAS</td></tr>
<tr><td>Concrete</td><td>IRAM1666-1</td></tr>
</table>
</td></tr>
<tr><td>7.4.2</td><td>Dimensions</td><td>HC type poles main characteristics are shown in the following in Table 5.
Maximum Bending Load, R is the 95% of the Failure load (Er).
<table>
<tr><th>Nominal Length (m)</th><th>Description</th><th>Top Diameter (mm)</th><th>Conicity (mm/m)</th><th>Coating (mm)</th><th>Ultimate design load (daN)</th><th>Safety Factor</th><th>Maximum Bending Load, R (daN)</th></tr>
<tr><td>10</td><td>10 m, 400 daN</td><td>220 to 240</td><td>15</td><td>≥15</td><td>400</td><td>3</td><td>1200</td></tr>
<tr><td>12</td><td>12m, 400 daN</td><td>220 to 240</td><td>15</td><td>≥15</td><td>400</td><td>3</td><td>1200</td></tr>
<tr><td>12</td><td>12m, 600 daN</td><td>240 to 260</td><td>15</td><td>≥15</td><td>600</td><td>3</td><td>1800</td></tr>
<tr><td>12</td><td>12m, 800 daN</td><td>260 to 280</td><td>15</td><td>≥15</td><td>800</td><td>3</td><td>2400</td></tr>
<tr><td>14</td><td>14m, 400 daN</td><td>220 to 240</td><td>15</td><td>≥15</td><td>400</td><td>3</td><td>1200</td></tr>
<tr><td>14</td><td>14m, 600 daN</td><td>240 to 260</td><td>15</td><td>≥15</td><td>600</td><td>3</td><td>1800</td></tr>
<tr><td>14</td><td>14m, 800 daN</td><td>260 to 280</td><td>15</td><td>≥15</td><td>800</td><td>3</td><td>2400</td></tr>
</table>
Table 5</td></tr>
<tr><td>7.4.4</td><td>Holes</td><td>Poles shall have one hole, located at a distance of 10 cm below the top. The characteristics shall be compliant with IRAM 1605.</td></tr>
<tr><td>7.4.5</td><td>Embedment length</td><td>For the embedment length following formula shall be applied:
He [m] = 0.1·L [m] + 0.6 [m].</td></tr>
<tr><td>7.4.6</td><td>Sag</td><td>In accordance with IRAM 1605.</td></tr>
<tr><td>7.4.7</td><td>Residual sag</td><td>In accordance with IRAM 1605.</td></tr>
</table>

N°	TITLE	DESCRIPTION - EDESUR
7.4.8	Cracks	According to IRAM 1605 The maximum allowable pre-existing cracks must be equal to or less than 0.1 mm. Cracks that appear while implementing stress related to 25% of Maximum Bending Load, R, should be less than 0.05 mm. Cracks that appear while implementing stress related to 35% of Maximum Bending Load, R, should be less than 0.1 mm. Cracks that appear while implementing stress related to 35% of Maximum Bending Load, R, should be less than 0.1 mm.
7.4.9	Nominal Stress	In accordance with Table 5.
7.4.10	Safety factor	This value is obtained by the following formula: $CS = \frac{E_R}{E_n}$ Where: CS: Safety Factor E_R: Maximum Bending Load, R (as defined in IRAM 1605) E_n: Ultimate design load Stresses are applied at the plane of real stress, which is located at a distance "d" below of the top of the pole. The safety factor shall be same as **3**.
7.4.11	Grounding or Earthing system	In accordance with IRAM 1605.
7.4.12	Marking and designation of pole	All poles shall have a labeling which is made on a metal plate (aluminum alloy or stainless steel) embedded in the concrete at a height of (L/10 + 2) m above the base, with indelible ink (the application of adhesives is not allowed), with letters and numbers 40 mm high, containing the following information: • Date of manufacture, • manufacturer´s name, • name of the distribution company, • nominal length, in metes • Maximum Bending Load, R, in daN, • safety factor • Failure Load • Batch number

<table>
<tr><th>N°</th><th>TITLE</th><th>DESCRIPTION - EDESUR</th></tr>
<tr><td>7.6.1</td><td>Type Tests</td><td>
<table>
<tr><th>N°</th><th>Test</th><th>Requirement</th><th>Test Method</th></tr>
<tr><td>1</td><td>Concrete additive materials</td><td>See §7.4.1</td><td>In accordance with IRAM 1605</td></tr>
<tr><td>2</td><td>Metal reinforcement steel</td><td>See §7.4.1</td><td>In accordance with IRAM 1605</td></tr>
<tr><td>3</td><td>Compressive resistance of concrete</td><td>See §7.4.1</td><td>In accordance with IRAM 1605</td></tr>
<tr><td>4</td><td>Concrete coating</td><td>≥15 mm</td><td>The test is performed typically after tensile strength verification.
5 points along the pole shall be identified along the pole exposing the reinforcing bar by means of a proper mechanical tool. Consequently, the thickness of the concrete shall be measured in each point with a gauge accurate 1 mm.
This verification may be performed by non-destructive process.</td></tr>
<tr><td>5</td><td>Test water absorption index</td><td>a) 6% of the average of the samples
b) 7.5% to test pole</td><td>1) The samples for absorption tests are removed after the tensile strength test. From the broken After each broken pole is removed 4 concrete blocks without apparent cracks, whose linear dimensions are four to ten times greater than the maximum diameter of the aggregate used in the production of concrete.
2) Samples are marked with the same number or identification mark of the poles that were removed. (Continue below)</td></tr>
</table>
</td></tr>
</table>

N°	TITLE	DESCRIPTION - EDESUR
7.6.1	Type Tests	

N°	Test	Requirement	Test Method
5	Test water absorption index	a) 6% of the average of the samples b) 7.5% to test pole	3) The samples are immersed in water, in a suitable vessel, at ambient temperature, for a minimum 30h, or until constant weight is maintained, that is, when 2 (two) successive weighing indicate an increase not higher than 0.1% of its original weight. Once removed from the water, drained for a 1 min and having removed the surface water carefully using a dry cloth, the sample shall be weighed immediately. After weighing, will dry at a temperature between 70 ° C and 80 ° C until 2 (two) successive weighing, with a minimum interval of 2 h, indicate a weight loss of no more than 0.1% of its original weight. 4) If the samples shown pieces of rebar, considerations of the results shall be determined and shall reduce its weight. 5) The difference in weight of the sample after immersion and after drying, expressed in percentages by weight of the dry sample, shall be the absorption index. 6) The absorption index of a pole in percentage is the arithmetic mean of the values obtained with the samples removed from the same pole.
6	Visual inspection and Checking dimensions	Approved drawings	Visual Inspection and tolerances according to IRAM 1605.
7	Marking	See clause §7.4.12	Visual Inspection. According to IRAM 1605.
8	Elastic bending test with Maximum Bending Load, R	In accordance with IRAM 1605.	In accordance with IRAM 1605
9	Failure Load test	In accordance with IRAM 1605.	In accordance with IRAM 1605.
10	Grounding or Earthing system verification	In accordance with IRAM 1605.	In accordance with IRAM 1605.

<table>
<tr><th>N°</th><th>TITLE</th><th>DESCRIPTION – EDESUR</th></tr>
<tr><td>7.6.2</td><td>Acceptance Tests</td><td>
During the acceptance tests carried out independently, the supplier shall apply the following sampling criterion: Double sampling plan for reduced inspection, level II, AQL of 2.5% (ISO 2859-1 Ed V 2007) apply for each type of pole under FAT. The ISO standard requires that up to a quantity of 50 pieces, it is applied single sampling plan for reduced inspection, level II, AQL of 2.5%.
<table>
<tr><th>N.</th><th>Test</th><th>Test Method</th></tr>
<tr><td>1</td><td>Concrete additive materials</td><td>7.6.1.1</td></tr>
<tr><td>2</td><td>Metal reinforcement steel</td><td>7.6.1.2</td></tr>
<tr><td>3</td><td>Compressive resistance of concrete</td><td>7.6.1.3</td></tr>
<tr><td>4</td><td>Concrete coating (a)</td><td>7.6.1.4</td></tr>
<tr><td>5</td><td>Test water absorption index (a)</td><td>7.6.1.5</td></tr>
<tr><td>6</td><td>Visual inspection and Checking dimensions</td><td>7.6.1.6</td></tr>
<tr><td>7</td><td>Marking</td><td>7.6.1.7</td></tr>
<tr><td>8</td><td>Elastic bending test with 50% Failure load</td><td>7.6.1.8</td></tr>
<tr><td>9</td><td>Failure Load test (a)</td><td>7.6.1.9</td></tr>
<tr><td>10</td><td>Earthing system verification</td><td>7.6.1.10</td></tr>
</table>
(a) The sample size must be one post in every 200 units
The test method and requirement are the same as detailed in section 7.6.1 (Type Tests).
During the repetition of the tests in the presence of the Enel inspector, the sampling is half of the sampling for acceptance tests performed independently by the supplier. For test 3, the Enel inspector will check the results of the test carried out by the accredited laboratory.
The certificates of conformity of the raw materials used in the manufacture of the poles must be available to the Enel Group.
</td></tr>
</table>

8.6 E-DISTRIBUZIONE (ITALY), ENEL DISTRIBUTIE (ROMANIA)

<table>
<tr><th>N°</th><th>TITLE</th><th>DESCRIPTION – E-DISTRIBUZIONE, ENEL DISTRIBUTIE</th></tr>
<tr><td>7.2</td><td>Local standards</td><td>D.M. 3-06-68
EN 197-1: 2011; EN 1992-1-1: 2004; EN 206-1: 2003
UNI EN ISO 6892: 2009 – EN ISO 6892: 2009
UNI EN 10080: 2005 – EN 10080: 2005
UNI EN 12350-1: 2009 – EN 12350
UNI EN 12390-1: 2012 – EN 12390-1: 2012
UNI EN 12390-2: 2009 – EN 12390-2: 2009
UNI EN 12390-3: 2009 – EN 12390-3: 2009
CEI 7.6 – EN ISO 1461: 2009
D.M. 174-1: 2018
UNI EN 12843: 2005 – EN 12843: 2004
EN 197-1: 2011
EN 206-1: 2013</td></tr>
<tr><td>7.4.1</td><td>Manufacturing materials</td><td>
<table>
<tr><th>Material</th><th>Reference Standards</th></tr>
<tr><td>Cement</td><td>D.M. 3-06-68, EN 197-1:2011 EN 206-1:2013, EN 1992-1-1:2004</td></tr>
<tr><td>Steel</td><td>UNI 556, EN ISO 6892:2009, UNI EN 10080: 2005, EN 10080:2005, CEI 7.6, EN ISO 1461:2009</td></tr>
<tr><td>Concrete</td><td>UNI EN 12350-1: 2009, EN 12350-1:2009,
UNI EN 12390-1: 2012, EN 12390-1: 2012,
UNI EN 12390-2: 2009, EN 12390-2:2009,
UNI EN 12390-3: 2009, EN 12390-3:2009,
D.M. 174-1:2018, UNI EN 12843:2005, EN 12843:2004</td></tr>
</table>
</td></tr>
</table>

<table>
<tr><th>N°</th><th>TITLE</th><th>DESCRIPTION E-DISTRIBUZIONE, ENEL DISTRIBUTIE</th></tr>
<tr><td>7.4.2</td><td>Dimensions</td><td>HC type poles main characteristics are shown in the following in Table 6.
<table>
<tr><th rowspan="2">Nominal Length (m)</th><th rowspan="2">type</th><th rowspan="2">Top Diameter, d (mm)</th><th rowspan="2">Butt Diameter, D (mm)</th><th rowspan="2">Theorical mass (Kg)</th><th rowspan="2">Ultimate design load (daN)</th><th colspan="4">Tensile Test “T” at a distance “h” from application (measured from the top of the pole)</th></tr>
<tr><th>"T1" (daN)</th><th>h1 (m)</th><th>"T2" (daN)</th><th>h2 (m)</th></tr>
<tr><td>10</td><td>A</td><td>120</td><td>270</td><td>620</td><td>304</td><td>412</td><td>≤0.1</td><td>-</td><td>-</td></tr>
<tr><td>10</td><td>B</td><td>140</td><td>290</td><td>720</td><td>393</td><td>550</td><td>≤0.1</td><td>-</td><td>-</td></tr>
<tr><td>10</td><td>C</td><td>180</td><td>330</td><td>950</td><td>606</td><td>824</td><td>≤0.1</td><td>-</td><td>-</td></tr>
<tr><td>10</td><td>D</td><td>200</td><td>350</td><td>1120</td><td>632</td><td>1091</td><td>≤0.1</td><td>-</td><td>-</td></tr>
<tr><td>10</td><td>E</td><td>240</td><td>390</td><td>1450</td><td>940</td><td>1638</td><td>≤0.1</td><td>-</td><td>-</td></tr>
<tr><td>10</td><td>F</td><td>270</td><td>420</td><td>1700</td><td>1345</td><td>2188</td><td>≤0.1</td><td>-</td><td>-</td></tr>
<tr><td>10</td><td>G</td><td>310</td><td>460</td><td>2100</td><td>2019</td><td>3286</td><td>≤0.1</td><td>-</td><td>-</td></tr>
<tr><td>12</td><td>B</td><td>140</td><td>320</td><td>1000</td><td>420</td><td>550</td><td>≤0.1</td><td>227</td><td>9</td></tr>
<tr><td>12</td><td>C</td><td>180</td><td>360</td><td>1270</td><td>614</td><td>824</td><td>≤0.1</td><td>265</td><td>9</td></tr>
<tr><td>12</td><td>D</td><td>200</td><td>380</td><td>1460</td><td>650</td><td>1099</td><td>≤0.1</td><td>-</td><td>-</td></tr>
<tr><td>12</td><td>E</td><td>240</td><td>420</td><td>1900</td><td>962</td><td>1648</td><td>≤0.1</td><td>-</td><td>-</td></tr>
<tr><td>12</td><td>F</td><td>270</td><td>450</td><td>2250</td><td>1312</td><td>2198</td><td>≤0.1</td><td>-</td><td>-</td></tr>
<tr><td>12</td><td>G</td><td>310</td><td>490</td><td>2700</td><td>2055</td><td>3296</td><td>≤0.1</td><td>-</td><td>-</td></tr>
<tr><td>12</td><td>H</td><td>320</td><td>500</td><td>3600</td><td>4168</td><td>6280</td><td>≤0.1</td><td>-</td><td>-</td></tr>
<tr><td>14</td><td>D</td><td>200</td><td>410</td><td>1910</td><td>640</td><td>1099</td><td>≤0.1</td><td>220</td><td>11</td></tr>
<tr><td>14</td><td>E</td><td>240</td><td>450</td><td>2400</td><td>993</td><td>1648</td><td>≤0.1</td><td>402</td><td>11</td></tr>
<tr><td>14</td><td>F</td><td>270</td><td>480</td><td>2800</td><td>1284</td><td>2198</td><td>≤0.1</td><td>263</td><td>11</td></tr>
<tr><td>14</td><td>G</td><td>310</td><td>520</td><td>3400</td><td>1975</td><td>3296</td><td>≤0.1</td><td>485</td><td>11</td></tr>
<tr><td>10[1]</td><td>G</td><td>310</td><td>460</td><td>2100</td><td>2019</td><td>3286</td><td>≤0.1</td><td>-</td><td>-</td></tr>
</table>
Table 6

[1] This pole is used as support for MV/LV transformer, therefore, in order to perform earthing resistance tests and measurement, an earthing circuit to be connected with the transformer tank must be embedded in the pole and the relevant earthing contact must be available at a height of 2,5 meters to the ground.

The general geometry of the pole type HC is shown in section 8.6.13 of this Appendix, the dimensions of the main sections are detailed. In Figure 15 shown the general geometrical configuration of this type of pole. Low Voltage poles have simplest features and obey the scheme 1 of Figure 16.</td></tr>
<tr><td>7.4.2</td><td>Dimensions</td><td>Poles to be used in MV/LV power lines shall be comply whit the scheme 2 in Figure 9 and include additional features to system grounding. In Table 6, the nominal measurements of the top and base diameter are established, theoretical mass, corresponding to the poles according to their length and nominal stress.</td></tr>
<tr><td>7.4.4</td><td>Holes</td><td>The arrangement of the holes as other particular are shown in Figure 9, these holes shall have a diameter of 22 mm.</td></tr>
<tr><td>7.4.5</td><td>Embedment lengthErrore. L'origine riferimento non è stata trovata.</td><td>The following formula shall be applied for embedment length:
he = 0,1 L
Where L is the nominal length of the pole.</td></tr>
</table>

N°	TITLE	DESCRIPTION E-DISTRIBUZIONE, ENEL DISTRIBUTIE
7.4.9	Nominal Stress	It is determined by Failure Load ER, which is to be the result of the combination of two stresses T1 and T2 applied on two specific points of the pole at a distance 0.1 and h2 from the top of the pole, tabulated in Table 6, as shown in Figure 6. 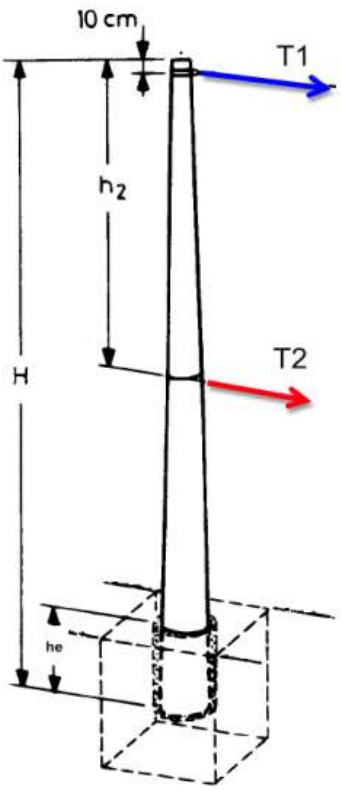 **Figure 5 Upright scheme to stress applications T1 and T2**
7.4.9	Nominal Stress	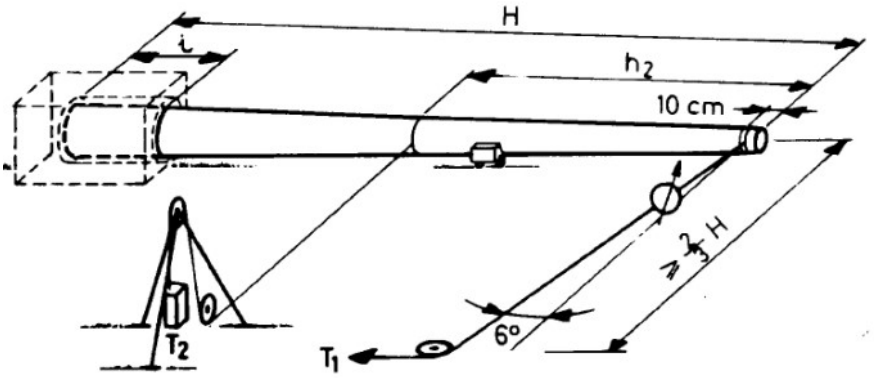 **Figure 6 Horizontal scheme of stress applications T1 and T2** Ultimate design load is shown in Table 6.

N°	TITLE	DESCRIPTION E-DISTRIBUZIONE, ENEL DISTRIBUTIE
7.4.11	Grounding or Earthing system	It shall consist for two elements that are: **Cap (bussola with hole to insert grounding system)** of hot dipped galvanized steel, which is welded to the rebar ring from the top of the pole. The Cap hole shall not be eccentric, respect to the diameter from the top of the pole. The inner of cap shall be free at least 70 mm to let appropriate adjustment of the bolt. The depth of the cap shall be covered by a plastic cover. The pole arrangement shown in Figure 10, detail "B". **Lower hole to insert grounding system**, composed of a steel insert as a blind hole on the edge of the outer surface located at the height of the pole embedment section. This insert is welded to the base ring. The location details are shown in Figure 9 and Figure 10 Detail "C".
7.4.12	Marking and designation of pole	The pole shall carry at 3m to the butt a metal plate (aluminum alloy or stainless-steel), with a minimum thickness of 3 mm, solidly anchored to the concrete pole. Registration shall be in high or bas relief so that it can be readable the following information: • Builder Acronym • Acronym of the pole (height, type, diameter) • Year of manufacture This model can see in Figure 10 detail "A".
7.4.12	Marking and designation of pole	**Designation** Centrifuged concrete poles for overhead power lines will be designated by groups of acronyms, arranged in the following order with the following meaning. Acronyms PALO CAC, indicative of the type of pole, in this case Centrifuged Concrete Pole. • Acronyms that represents, in meters, the length of the pole. • Acronym that represents the type of the pole. • he values range from A-H and L. • Acronyms that represents, in centimeters, the top's diameter of the pole. • Batch number Example: **PALO CAC – 10 / B / 14**: Pole type CAC 10 m length, type "B" and 14 cm diameter from the top of the pole.
7.4.16	Tolerances	• On diameters "D" and "d": ±3% • On the hole diameters: +2mm • On the center distances of the holes: ±10mm • On the total height: +50mm / -20mm • On the individual mass of the poles: ±10% • On the thickness of the poles: +15% / -10% On the straightness of the pole: 0,3%

7.6.1	Type tests	**N°**	**Test**	**Requirement**	**Test Method**
		1	Visual inspection	Checking erroneous characteristics on pole	Visual inspection.
		2	Checking dimensions	Check if tolerances are no exceed	Direct verification by means tools of the pole dimensions.
		3	Mass checking	Checking values in Table 6	Consists at controlling the mass of each pole according to the reference value.
		4	Grounding or Earthing system verification		Consist of two tests a) Mechanical strength test of the lower insert, willing for grounding. Screw the normalized ground terminal in the hole provided and check if no occur faults in the immediate vicinity, then tighten with a dynamometric wrench a torque of 10 kg-m. b) Checking on the electrical continuity of the connection between the top cap and the lower insert. It is performed applying a voltage between the cap and the insert to permit the current flow of not less than 20 A, so that the ratio between the applied voltage, expressed in volts, and the effective current, in amperes is not greater than 0.05 ohms.
		5	Concrete coating	≥15 mm [1]	The test is performed typically after tensile strength verification. 5 points along the pole shall be identified along the pole exposing the reinforcing bar by means of a proper mechanical tool. Consequently, the thickness of the concrete shall be measured in each point with a gauge accurate 1 mm. This verification may be performed by non-destructive process.
		6	Mechanic Resistance of bussola	The test is considered valid if it can achieve the required stress without the presence of lesions in the pole and bussola.	It shall apply gradually an equivalent stress equal to 1/3 of the tensile test "T1" (indicated in Table 6 for each type of pole) on a bolt of appropriate test, up to 800 kg. At half of this value fine cracks can appear, that are no longer vis

[1] ≥10 mm for Type pole: A, B, C.

N°	TITLE	DESCRIPTION - E-DISTRIBUZIONE, ENEL DISTRIBUTIE
7.6.1	Type tests	

N°	Test	Requirement	Test Method
7	Elastic Bending Test (with 40% Er)	In the maximum stress only shall occur capillary cracks, which disappear from view by removing the load.	a) It applies on the pole a stress T1 and T2 (in accordance with arrangement of Figure 5) divided by 2.5, for the time necessary to measure the displacement of the top section and the following sections, taken from 2 m to 2 m with respect to the initial position of the pole. b) It shall be verified that during the implementation of stresses, the pole will act with a smooth curve without sharp points
8	Failure Load Test	Effective Failure Load is the recorded maximum reading just before the pole fracture.	a) Provide the pole according to the scheme shown in Figure 5 or that shown in Figure 6. b) The interlocking or embedment length shall be continuous, it enough to ensure that every stress shows no buckling. c) The values of T1, T2, h1, h2 are characteristic to each tested pole and are tabulated in Table 6. The test considers the moment diagram of the effect arising due to the conductors and wind pressure. d) The T2 stress shall be maintained constant during the test. Being T1 a variable stress, whose value shall gradually increase until achieve a value T1. e) Successively will increase the stress on the top to achieve effective break of the pole. f) The dynamometer used shall have accuracy not less than 3% of the T1 stress and the drive mechanism shall allow, a gradual stress increase, at 20% of the T1 stress
9	Metal reinforcement steel	According to UNI 556 EN ISO 6892: 2009 According to UNI 6407 EN 12390-3: 2009	According to UNI 556 EN ISO 6892: 2009
10	Welding Method	According to UNI 556 EN ISO 6892: 2009	According to UNI 556 EN ISO 6892: 2009
11	Compressive resistance of concrete	According to UNI 6130-72 EN 12390-1: 2012	According to UNI 6126-72 EN 12350-1: 2009
12	Tensile Test for Rebar	According to UNI 556 EN ISO 6892: 2009	According to UNI 556 EN ISO 6892: 2009

<table>
<tr><th>N°</th><th>TITLE</th><th>DESCRIPTION - E-DISTRIBUZIONE, ENEL DISTRIBUTIE</th></tr>
<tr><td>7.6.2</td><td>Acceptance Tests</td><td>
During the acceptance tests carried out independently, the supplier shall apply the following sampling criterion: Double sampling plan for reduced inspection, level II, AQL of 2.5% (ISO 2859-1 Ed V 2007) apply for each type of pole under FAT. The ISO standard requires that up to a quantity of 50 pieces, it is applied single sampling plan for reduced inspection, level II, AQL of 2.5%.
<table>
<tr><th>N.</th><th>Test</th><th>Test Method</th></tr>
<tr><td>1</td><td>Visual inspection</td><td>7.6.1.1</td></tr>
<tr><td>2</td><td>Checking dimensions</td><td>7.6.1.2</td></tr>
<tr><td>3</td><td>Mass checking</td><td>7.6.1.3</td></tr>
<tr><td>4</td><td>Grounding or Earthing system verification</td><td>7.6.1.4</td></tr>
<tr><td>5</td><td>Compressive resistance of concrete (a)</td><td>7.6.1.11</td></tr>
<tr><td>6</td><td>Tensile Test for Rebar (b)</td><td>7.6.1.12</td></tr>
</table>
(a) to be performed on 100% referred the quantity of the samples taken for each concrete mixer used during production. The verification of the concrete shall be done 28 days after the day of production. Concrete minimal compressive strength Rc ≥ 540 daN/cm2. There must be traceability of the concrete used and the batch numbers of the poles produced. The characteristics of the concrete used must comply with the requirements of this document.
(b) documentation check. unit breaking load R ≥ 540 N/mm2; unit yield strength Rs ≥ 450 N/mm2. There must be traceability of the supply batch of the steel used and the batch numbers of the poles produced. The characteristics of the steel used must comply with the requirements of this document.
The test method and requirement are the same as detailed in section 7.6.1 (Type Tests).
During the repetition of the tests in the presence of the Enel inspector, the sampling is half of the sampling for acceptance tests performed independently by the supplier. For test 5 the Enel inspector can select a sample, at its discretion, with the following criteria:
1. One specimen for day of production or
2. One specimen for type of pole
with a minimum of 3 and a maximum of 10 specimens.
</td></tr>
</table>

N°	TITLE	DESCRIPTION - E-DISTRIBUZIONE, ENEL DISTRIBUTIE
7.4.14	Design Drawing	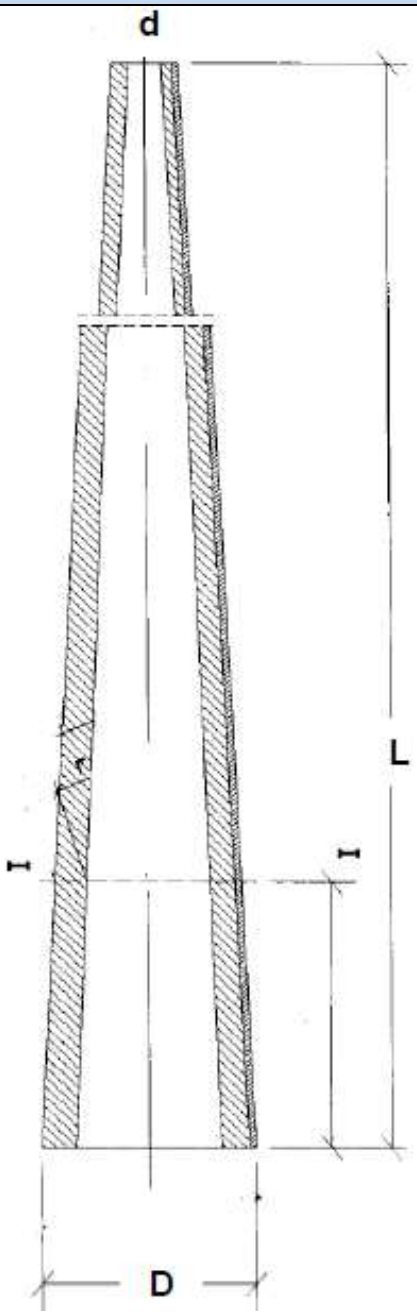 Figure 8 Overall geometrical configuration of pole type HC

N°	TITLE	DESCRIPTION - E-DISTRIBUZIONE, ENEL DISTRIBUTIE
7.4.14	Design Drawing	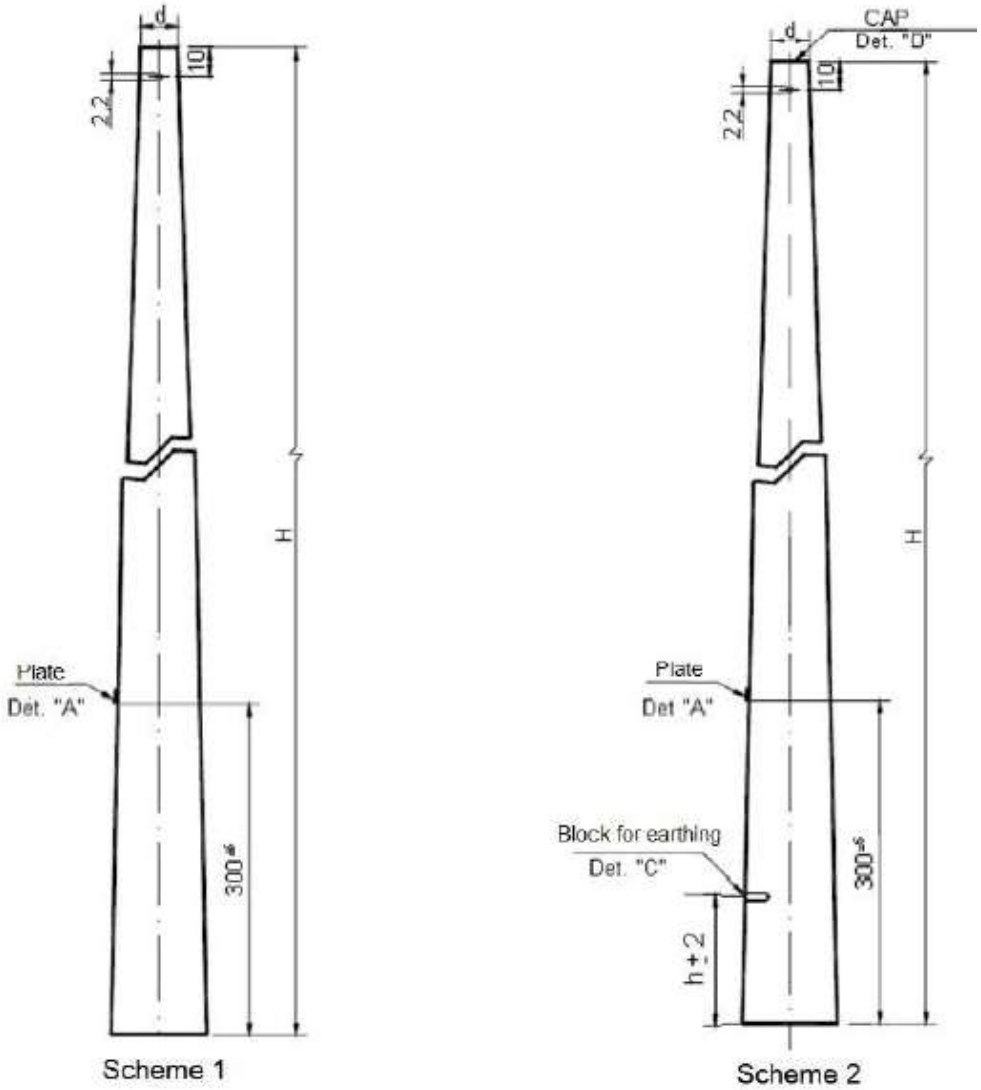 Figure 9 Poles LV/MV schemes

N°	TITLE	DESCRIPTION - E-DISTRIBUZIONE, ENEL DISTRIBUTIE
7.4.14	Design Drawing	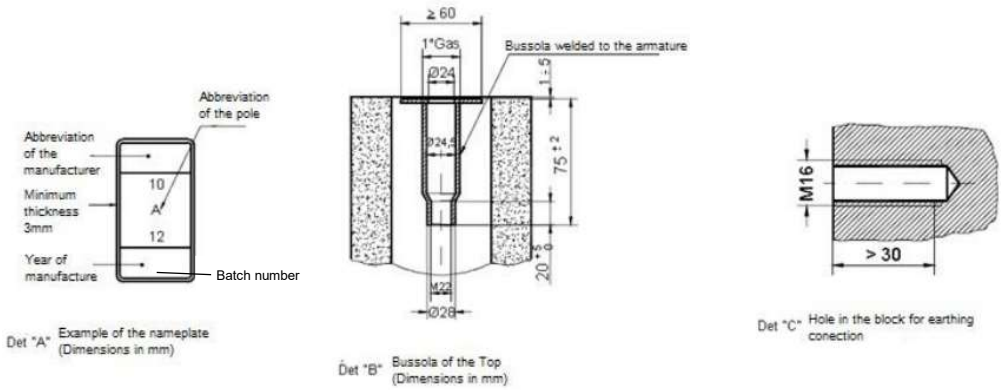 Figure 10 General construction details of pole type HC

8.7 TECHNICAL CHECK LIST EXAMPLE

The following chart indicates the minimum technical information that suppliers shall provide.

Item	Description	Unit	Required	Offered
1	**GENERAL INFORMATION**			
1.1	Supplier	-		
1.2	Factory	-		
1.3	Supplier Product Designation	-		
2	**MAIN FEATURES**			
2.1	Distribution Company and Country	-	Brazil	
2.2	Country Code	-	230063	
2.3	GS Type Code		GSS002/41	
2.4	Nominal Length	[m]	10	
2.5	Type	-	C-23	
2.6	Description		10/1000 daN	
2.7	Top Diameter	(mm)	230	
2.8	Butt Diameter	(mm)	430	
2.9	Conicity	(mm/m)	20	
2.10	Coating	(mm)	≥15	
2.11	Mass	(Kg)	1350	
2.12	Ultimate design load	(daN)	1000	
2.13	Safety Factor		2	
2.14	Minimum failure load	(daN)	2000	

8.8 MATERIAL CODE ASSOCIATION TABLE

The following table shows the association codes for materials that have changed code from previous specification revisions with equivalent characteristics. This table has been created using a conservative method in which the characteristics of the pole has been oversized. Other alternatives could be evaluated on a case-by-case basis.

Association between HC type poles of GSS002 rev.5 and HC type poles of GSS002 rev.4.

GS Type Code GSS002 rev.5	Distribution Company and Country	Country Code GSS002 rev.5	Description GSS002 rev.5	E4E Country code and description	Country Code GSS002 rev.4 and description	E4E Country code and description	Country Code GSS002 rev.4 and description	E4E Country code and description	Country Code GSS002 rev.4 and description
GSS002/39	Brazil	230065	10/300	231762	14805				
				9/300					
GSS002/40	Brazil	230064	10/600	231798	18727				
				9/600					
GSS002/41	Brazil	230063	10/1000	231767	14811				
				10/1000					
GSS002/42	Brazil	230062	12/300	231799	18728				
				13/300					
GSS002/43	Brazil	230061	12/600	231684	496	231687	500		
				11/600		12/600			
GSS002/44	Brazil	230060	12/1000	231717	4279	231689	502		
				11/1000		12/1000			
GSS002/45	Brazil	230059	12/2000	231870	41030	231729	5901	231710	3097
				11/1500		12/1500		12x2000	
GSS002/47	Brazil	230057	14/1000	231691	504				
				13/1000					
GSS002/48	Brazil	230056	14/600	231718	4282	231709	2815		
				13/600		14/600			
GSS002/49	Brazil	230055	14/2000	231824	21016	231848	38243		
				13/1500		13/2000			
GSS002/52	CD-Colombia	230053	10x300	230954	6762449				
				10x510					
GSS002/53	CD-Colombia	230955	10x400	230955	6762450				
				10x1050					
GSS002/54	CD-Colombia	230957	12x300	230957	6762452				
				12x750					
GSS002/55	CD-Colombia	230966	12x400	230966	6762467				
				12x1050					
GSS002/56	CD-Colombia	230052	12x500	270686	6769870				
				12x1350					
GSS002/58	CD-Colombia	230050	12x1300	230959	6762455				
				12x3000					

GS Type Code GSS002 rev.5	Distribution Company and Country	Country Code GSS002 rev.5	Description GSS002 rev.5	E4E Country code and description	Country Code GSS002 rev.4 and description	E4E Country code and description	Country Code GSS002 rev.4 and description	E4E Country code and description	Country Code GSS002 rev.4 and description
GSS002/59	CD-Colombia	230958	14x300	230958	6762453				
				14x750					
GSS002/60	CD-Colombia	230960	14x400	230960	6762458				
				14x1050					
GSS002/61	CD-Colombia	230965	14x500	230965	6762464				
				14x1350					
GSS002/63	CD-Colombia	230048	14x1300	230974	6764021				
				14x3000					
GSS002/64	CD-Colombia	230047	14x2000	230975	6764022	230972	6763233		
				14x3500		12x3500			
GSS002/65	ES-Argentina	0118-0214	10m,400		0118-0031		0118-0033		
				7.50m,1050daN		8.50m,1050daN			
GSS002/66	ES-Argentina	0118-0213	12m,400		0118-0046		0118-0035		0118-0030
				11m,1200daN		12m,900daN		12m, 1200daN	
GSS002/67	ES-Argentina	0118-0212	12m,600						
GSS002/68	ES-Argentina	0118-0211	12m,800		0118-0038				
				12m, 2400daN					
GSS002/69	ES-Argentina	0118-0209	14m,400		0118-0051		0118-0032		0118-0034
				13 m, 900daN		13m, 1200daN		14m, 1200daN	
GSS002/70	ES-Argentina	0118-0210	14mx600		0118-0037		0118-0048		0118-0053
				13m, 1800daN		14m, 1800daN		15m, 1200daN	
GSS002/71	ES-Argentina	0118-0208	14mx800		0118-0052		0118-0062		
				13m, 2400daN		14m, 2400daN			
GSS002/89	ES-Peru	230085	8/600/2/210/330	230824	6785152	230823	6785151		
				8/200/2/150/270		7/200/2/150/255			
GSS002/90	ES-Peru	230089	10/300/2/150/300	230825	6785153				
				9/200/2/150/285					
GSS002/92	ES-Peru	230090	12/300/2/150/330	230770	6756424				
				11/200/2/150/315					
GSS002/93	ES-Peru	230083	12/600/2/210/390	230768	6756411				
				11/400/2,5/180/345					
GSS002/95	ES-Peru	230093	14/600/2,5/210/420	230771	6756425				
				13/400/2,5/180/375					
GSS002/99	ES-Peru	230086	16/600/2,5/210/450	230772	6756426				
				15/400/2,5/210/435					

Association between HC type poles of GSS002 rev.5 and HV type poles of GSS002 rev.4.

GS Type Code GSS002 rev.5	Distribution Company and Country	Country Code GSS002 rev.5	Description GSS002 rev.5	E4E Country code and description	Country Code GSS002 rev.4 and description	E4E Country code and description	Country Code GSS002 rev.4 and description	E4E Country code and description	Country Code GSS002 rev.4 and description	E4E Country code and description	Country Code GSS002 rev.4 and description
GSS002/39	Brazil	230065	10/300	231227	6770683	231228	6770686	231299	6771952	231720	4284
				9m/150daN		9m/300daN		9m/200daN		10/300 daN	
GSS002/40	Brazil	230064	10/600	231235	6770703	231300	6771953	231189	4664001	231768	14812
				9m/600daN		9m/400daN		9m/600daN		10/600 daN	
GSS002/42	Brazil	230062	12/300	231274	6770796	231275	6770797	231232	6770694	231301	6771954
				10,5m/150daN		10,5m/300daN		12m/300daN		11m/200daN	
GSS002/42	Brazil	230062	12/300	231701	519	231721	4288				
				11/300 daN		12/300 daN					
GSS002/43	Brazil	230061	12/600	231276	6770798	231233	6770699	231302	6771955	230846	6799790
				10,5m/600daN		12m/600daN		11m/400daN		11m/600daN	
GSS002/43	Brazil	230061	12/600	231304	6771957	231305	6771958				
				12m/400daN		12m/600daN					
GSS002/44	Brazil	230060	12/1000	231277	6770799	231238	6770709	231190	4664002	231192	4664004
				10,5m/1000daN		12m/1000/daN		11/1000daN		12/1000daN	
GSS002/45	Brazil	230059	12/2000	231191	4664003	231193	4664005				
				11/1500daN		12/2000daN					
GSS002/47	Brazil	230057	14/1000	231194	4664006						
				13/1000daN							
GSS002/48	Brazil	230056	14/600	231382	6803414						
				13/600daN							
GSS002/49	Brazil	230055	14/2000	231195	4664007						
				13/2000daN							

8.9 ANNEX FOR CODENSA

Marks for telecommunication area.

In addition to the markings specified in paragraphs 7.4.12 and 7.4.15 the poles shall be marked, using indelible blue paint, on diametrically opposite sides of the pole itself according with the following figure 11.

The dimension of electric hazard drawing shall be compliant with IEC 60417-1 standard.

The strips shall have a length not less than 150 mm and wide not less than 25 mm. The positioning of the strips is always the same with respect to the embedment line of the pole, regardless of its height.

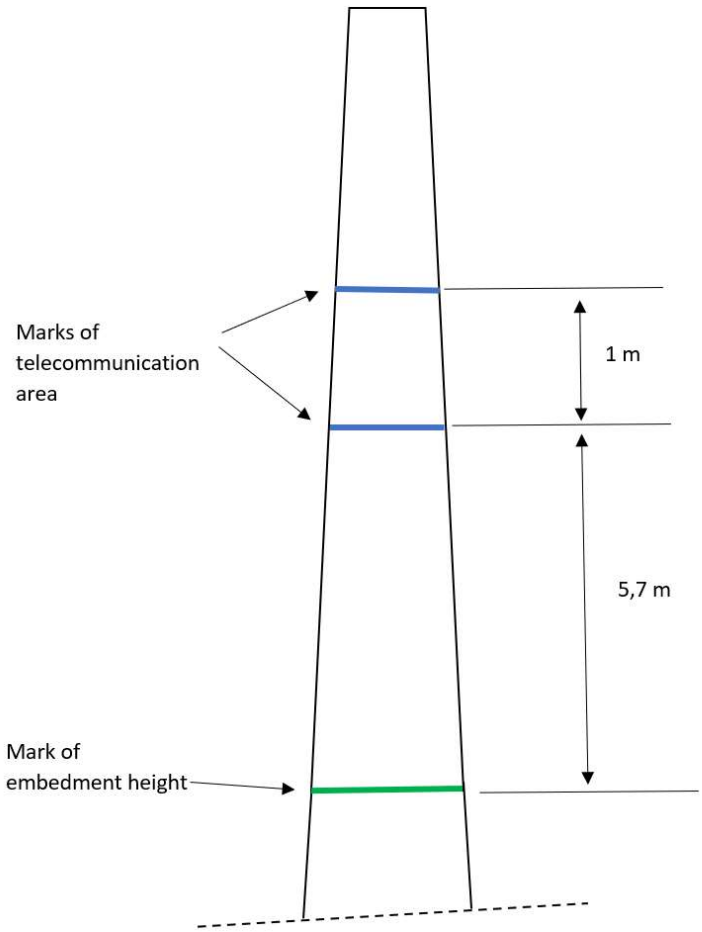

Figure 11

Furthermore an RFID tag must also be inserted inside the concrete structure, 10 cm below the marking plate. The RFID tags will be provided by Enel to the supplier after the purchase order has been issued.

The dimensions of the RFID tag are shown in the following figure 12.

Figure 12