CONTENTS

1 DOCUMENT AIMS AND APPLICATION AREA **4**
1.1 RELATED DOCUMENTS TO BE IMPLEMENTED AT COUNTRY LEVEL 4
2 DOCUMENT VERSION MANAGEMENT **5**
3 UNITS IN CHARGE OF THE DOCUMENT **5**
4 REFERENCES **6**
4.1 ENEL GRIDS INTERNATIONAL REFERENCE STANDARDS 6
4.2 ENEL GRIDS INTERNATIONAL LAWS 8
4.3 ENEL GRIDS COUNTRY REFERENCE LAWS 9
4.3.1 Brazil 9
4.3.2 Chile 9
4.3.3 Colombia 9
4.3.4 Iberia/Spain 9
4.3.5 Italia 9
4.3.6 Peru 9
4.3.7 Romania 9
4.4 ENEL GRIDS COUNTRY REFERENCE STANDARDS AND OTHER RELEVANT DOCUMENTS 10
4.4.1 Brazil 10
4.4.2 Chile 10
4.4.3 Colombia 10
4.4.4 Iberia/Spain 10
4.4.5 Italia 11
4.4.6 Peru 11
4.4.7 Romania 11
5 ORGANIZATIONAL PROCESS POSITION IN THE PROCESS TAXONOMY **11**
6 DEFINITIONS AND ACRONYMS **11**
7 DESCRIPTION **13**
7.1 SERVICE CONDITIONS 13
7.2 RATINGS 13
7.2.1 Type of transformers 14
7.2.2 Number of windings 14
7.2.3 Number of phases 14
7.2.4 Cooling system 14
7.2.5 Rated power 14
7.2.6 Rated voltages 14
7.2.7 Rated frequency 14
7.2.8 Voltage regulation 14
7.2.9 Windings connections 14
7.2.10 Installation 14
7.2.11 Insulation levels 14

7.2.12 Losses, short circuit impedances and sound power levels 15
7.2.13 Temperature rise 15
7.2.14 Capability to withstand short-circuit 15
7.2.15 Overloading 15
7.2.16 Sound levels 15
7.2.17 Overall dimensions and layout 15
7.2.18 Rating plates 15
7.2.19 Tolerances 15

7.3 DESIGN REQUIREMENTS 15
7.3.1 Core 16
7.3.2 Windings 16
7.3.3 Tank 16
7.3.4 Insulating liquid and material 17
7.3.5 Liquid insulating filling and sealing procedures 17
7.3.6 Bushings 17
7.3.7 De-energized tap-changer for MV voltage regulation 18
7.3.8 De-energized tap-changer for MV voltage commutation 19
7.3.9 Supporting and sliding devices 19
7.3.10 Protective painting 19
7.3.11 Accessories 20
7.3.12 Identification of accessories and components 23

7.4 EXCEPTIONS 23

7.5 DOCUMENTATION 23
7.5.1 Document for the offer 23
7.5.2 Documentation for the technical conformity assessment (TCA) 23
7.5.3 Documents for delivering 25

7.6 TESTS 25
7.6.1 List and classification of tests 25
7.6.2 Tests description 27

7.7 GUARANTEE 30

7.8 TRANSPORT AND PACKING 30

7.9 OTHER LOCAL ISSUES 30

7.10 FIGURES 31

ANNEXES **35**

ANNEX A: LIST OF COMPONENTS **35**

ANNEX B: TECHNICAL OFFER **71**

ANNEX C: LOCAL SECTION - BRAZIL 74

ANNEX D: LOCAL SECTION - CHILE 96

ANNEX E: LOCAL SECTION - COLOMBIA 114

ANNEX F: LOCAL SECTION - IBERIA/SPAIN 127

ANNEX G: LOCAL SECTION - ITALY ……..……..……..139

ANNEX H: LOCAL SECTION - PERU……..……..……162

ANNEX I: LOCAL SECTION - ROMANIA……..……..……..174

ANNEX J: LOCAL SECTION - ARGENTINA…….. *Work in progress*

THE HEAD OF GLOBAL NETWORK COMPONENTS
Fabrizio GASBARRI

1 DOCUMENT AIMS AND APPLICATION AREA

This document prescribes the technical requirements for the supply of the distribution transformers (medium and small power transformers) to be used in the distribution networks in the Enel Group Distribution Companies, listed below:

Country	Distribution Company
Argentina (AR)	Edesur
Brazil (BR)	Enel Distribuição Rio Enel Distribuição Ceará Enel Distribuição São Paulo
Chile (CL)	Enel Distribución Chile
Colombia (CO)	Enel Colombia
Iberia -Spain- (ES)	e-distribución
Italy (IT)	e-distribuzione
Peru (PE)	Enel Distribución Peru
Romania (RO)	Enel Distributie Banat Enel Distributie Dobrogea Enel Distributie Muntenia

Table 1 - Distribution Companies

This document shall be implemented and applied to the extent possible within the Enel Grids Business Line and in compliance with any applicable laws, regulations and governance rules, including any stock exchange and unbundling-relevant provisions, which in any case prevail over the provisions contained in this document.

1.1 Related documents to be implemented at country level

Additional prescriptions or integration to the main **Common Part** (CP) are reported in the respective **Local Sections** with the same corresponding clause or sub-clause number, providing the specific requirements of each Enel Group Distribution Company at country level.

Anyway, each Enel Grids Company can issue, under the supervision of Enel Grids Global Network Components a detailed document, according to the provisions of the present document and in case of specific needs.

2 DOCUMENT VERSION MANAGEMENT

Version	Date	Main changes description
00	30/09/2012	First emission
01	31/10/2012	Common List: LV bushing types updated for code /237 and /241 and noise level values reduced in accordance with relevant standards for Italy, Romania and Peru. Local Section A: additional requirements for rating plates indicated in 6.10.8. Local Section C: acceptable noise limits for reduced losses indicated in 5.12 and eyebolt positions and dimensions updated in 5.16.
02	02/02/2015	Commission Regulation (EU) N. 548/2014 (Ecodesign requirements), Type and Country Codes updated and other improvements. Local Section LATAM: for Edelnor and Codensa updated paragraphs and tables, added new country code /516 and other improvements. Local Section Spain: updating for R.D. 337/2014. Local Sections Italy and Romania: windings only aluminium up to 160 kVA, colour of painting RAL 6002, nylon-wheels accepted up to 250 kVA).
03	31/01/2018	Local Part of Spain: Standard references updating and editorial corrections. Local part Italy and Romania: added rating plate example in compliance with Ecodesign Common List European countries: updated with new country codes for Spain and some editorial improvements for Italy and Spain. (updatings are highlighted in yellow).
04	22/12/2020	General editorial improvements Amendments integration Efficiency requirements for Europe. Europe part completed, Latam work in progress. Define specific section for Italy and Romania
05	31/12/2022	Efficiency requirements for Latam Latam part completed (except Argentina) and divided for each country. Harmonization of Latam Local Sections: convergence in terms of design requirements. Added Amendment 01 and 02 GST001-EU rev 4. Added 1000 V and 27 kV transformers for Italy. Completed List of Components for Romania.

3 UNITS IN CHARGE OF THE DOCUMENT

Responsible for drawing up the document:

- Enel Grids: Engineering and Construction / Components and Devices Design/ Network Components unit.

Responsible for authorizing the document:

- Enel Grids: Head of Network Components unit;
- Enel Grids: Head of Quality unit.

4 REFERENCES

- Integrated Policy for Quality, Health and Safety, Environment, Anti-Bribery and Information Security;
- Stop Work Policy;
- Material Specification MAT-O&M-NCS-2021-0033-EGIN "GSCG002 Technical Conformity Assessment";
- Material Specification MAT-E&C-NC-2021-0057-GIN "GSCG003 Employer's Information Requirements for supplier components";
- Working Instruction GRI-GRI-WKI-O&M-0020 Contractual Requirements for Components and Materials Quality management -ex WKI-QPT-CMQ-2020-0022;
- Construction Specification GRI-GRI-CNS-O&M-0002 Barcode specification - ex CNS-O&M-S&L-2021-0032-EGIN.

Group Pillar References:

- The Code of Ethics of Enel Group;
- The Enel Group Zero Corruption Tolerance Plan (ZTC);
- Human Rights Policy;
- Organization and Management Model as per Legislative Decree No. 231/2001;
- Enel Global Compliance Program (EGCP).

4.1 Enel Grids International Reference Standards

- ISO 9001 - Quality Management System – Requirements;
- ISO 14001 - Environmental Management System - Requirements with guidance for use;
- ISO 45001 - Occupational Health and Safety Management System - Requirements with guidance for use;
- ISO 37001 - Anti-bribery Management System - Requirements with guidance for use;
- ISO 27001 - Information Security Management System – Requirements;
- ISO/IEC 17000 - Conformity assessment – Vocabulary and general principles;
- ISO/IEC 17020 - General criteria for the operation of various types of bodies performing inspection;
- ISO/IEC 17025 - General requirements for the competence of testing and calibration laboratories;
- ISO/IEC 17050-1 - Conformity assessment - Supplier's declaration of conformity - Part 1: General requirements (ISO/IEC 17050-1:2004, corrected version 2007-06-15);

- ISO/IEC 17050-2 - Conformity assessment - Supplier's declaration of conformity - Part 2: Supporting documentation (ISO/IEC 17050-2:2004);
- ISO/IEC 17065 - Conformity assessment – Requirements for bodies certifying products, processes and services;
- IEC 60076-1 - Power transformers – Part 1: General;
- IEC 60076-2 - Power transformers – Part 2: Temperature rise for liquid-immersed transformers;
- IEC 60076-3 - Power transformers – Part 3: Insulation levels, dielectric tests and external clearances in air;
- IEC 60076-5 - Power transformers – Part 5: Ability to withstand short circuit;
- IEC 60076-7 - Power transformers – Part 7: Loading guide for oil-immersed power transformers;
- IEC 60076-10-1 - Power transformers – Part 10-1: Determination of sound levels– Application Guide;
- IEC 60076-22 series - Power transformers – Part 22: Power transformer and reactor fittings;
- IEC 60137 - Insulated bushings for alternating voltages above 1 000 V;
- IEC 60296 - Fluids for electrotechnical applications - Mineral insulating oils for electrical equipment;
- IEC 62770 - Fluids for electrotechnical applications – Unused natural esters for transformers and similar electrical equipment;
- IEC 62975 - Natural esters – Guidelines for maintenance and use in electrical equipment;
- IEC 61099 - Insulating liquids – Specifications for unused synthetic organic esters for electrical purposes;
- IEC 61203 - Synthetic organic esters for electrical purposes - Guide for maintenance of transformer esters in equipment;
- IEC 60422 - Mineral insulating oils in electrical equipment - Supervision and maintenance guidance;
- IEC 60815 - Guide for the selection and dimensioning of high-voltage insulators for polluted conditions;
- IEC 60214-1 - Tap-Changers - Part 1: Performance requirements and test methods;
- IEC 60317 - Specifications for particular types of winding wires;
- IEC 60085 - Thermal evaluation and designation of electrical insulation;
- IEC 60641-2 - Pressboard and presspaper for electrical purposes - Part 2: Methods of test;
- IEC 60417-2 - Graphical symbols for use on equipment - Part 2: Symbol originals;

- ISO 2808 - Paints and varnishes – Determination of film thickness;
- ISO 2409 - Paints and varnishes - Cross-cut test;
- ISO 2859-1 - Sampling procedures for inspections by attributes;
- ISO 12944 series - Paints and varnishes - Corrosion protection of steel structures by protective paint systems;
- ISO 19840 - Paints and varnishes — Corrosion protection of steel structures by protective paint systems — Measurement of, and acceptance criteria for, the thickness of dry films on rough surfaces;
- ISO 8501 - Preparation of steel substrates before application of paints and related products - Visual assessment of surface cleanliness;
- ISO 2178 - Non-magnetic coatings on magnetic substrates - Measurement of coating thickness - Magnetic method;
- EN 50708 series - Power transformers - Additional European requirements;
- EN 50464-4 - Three-phase oil-immersed distribution transformers - Requirements and tests concerning pressurized corrugated tanks;
- EN 50216 series - Power transformer and reactor fittings;
- EN 50180 - Bushings above 1 kV up to 36 kV and from 250 A to 3,15 kA for liquid filled transformers;
- EN 50386 - Bushings up to 1 kV and from 250 A to 5 kA for liquid filled transformers;
- EN 50387 - Busbar bushings 1 kV and from 1,25 kA to 5 kA for liquid filled transformers;
- EN 50216-4 - Power transformer and reactor fittings - Part 4: Basic accessories (earthing terminal, drain and filling devices, thermometer pocket, wheel assembly);
- DIN 42551 - Oil drain devices.

4.2 Enel Grids International Laws

For all European Countries:

- The efficiency performance of the transformers shall comply with the related European Commission Regulation (EU) No 548/2014 on implementing Directive 2009/125/EC of the European Parliament and of the Council with regard to small, medium and large power transformers and the corresponding amending Commission Regulation (EU) 2019/1783 of 1 October 2019.
- Regulation (EC) No 1272/2008 of the European Parliament and of the Council of 16 December 2008 on classification, labelling and packaging of substances and mixtures, amending and repealing Directives 67/548/EEC and 1999/45/EC, and amending Regulation (EC) No 1907/2006.

- Directive 2010/75/EU of the European Parliament and of the Council of 24 November 2010 on industrial emissions (integrated pollution prevention and control).

4.3 Enel Grids Country Reference Laws

4.3.1 Brazil

- Portaria Interministerial n°3, do Ministério de Minas e Energia de 31/07/2018;
- Portaria Inmetro nº 378, do INMETRO, de 28/09/2010.

4.3.2 Chile

4.3.3 Colombia

- Reglamento Técnico de Instalaciones Eléctricas, RETIE (Resolución 90708 de agosto 30 de 2013).
- NSR-10 Reglamento de construcción sismo resistente (Decreto 926 del 19 de marzo de 2010).

And subsequent modification/integration.

4.3.4 Iberia/Spain

- R.D. 337/2014 “Reglamento sobre condiciones técnicas y garantías de seguridad en instalaciones eléctricas de alta tensión y sus Instrucciones Técnicas Complementarias ITC-RAT 01 a 23.”
- R.D. 614/2001 “Disposiciones mínimas para la protección de la salud y seguridad de los trabajadores frente al riesgo eléctrico”.

And subsequent modification/integration.

4.3.5 Italia

- D.Lgs n. 81/2008
- D.Lgs n. 52/1997
- D.Lgs. n. 209/1999
- D.M. 11/10/2001
- D.M. 28/04/1997

And subsequent modification/integration.

4.3.6 Peru

- Resolución Ministerial N°002-2021-MINEM:
  - Guía metodológica para el inventario de existencias y residuos para la identificación de bifenilos policlorados (PCB) – MINEM(Ministerio de Energía y Minas) – DIC 2020;
  - Guía metodológica para la elaboración del plan de gestión ambiental de bifenilos policlorados (PGA PCB) aplicable a la actividad eléctrica. MINEM – DIC 2020.

4.3.7 Romania

- Legea nr. 319/2006

- Legea nr. 265/2006HG 1408/2008
- HG 173/2000
- HG 1159/2007

And subsequent modification/integration.

4.4 Enel Grids Country Reference Standards and other Relevant Documents

4.4.1 Brazil

- ABNT NBR 5440 - Transformadores para redes aéreas de distribuição — Requisitos;
- ABNT NBR 5435 - Buchas para transformadores imersos em líquido isolante - Tensão nominal 15 kV, 24,2 kV e 36,2 kV - Especificações;
- ABNT NBR 16856, Buchas para transformadores imersos em líquido isolante — Tensão nominal de 1,2 kV e correntes de 160 A até 8 000 A — Especificação.

4.4.2 Chile

- ETG-1020: “Requisitos de Diseño Sísmico para Equipo Eléctrico - INGENDESA“. Applies for Chilectra;
- Pliegos Técnicos Normativos RPTD – SEC;
- Pliegos Técnicos Normativos RIC – SEC.

4.4.3 Colombia

4.4.4 Iberia/Spain

- UNE 21428-1 - Transformadores trifásicos de distribución sumergidos en aceite, 50 Hz, de 25 kVA a 3150 kVA contensión elevada para material hasta 36 kV. Parte 1 :Requisitos generales;
- UNE 21428-1-1 - Transformadores trifásicos de distribución sumergidos en aceite, 50 Hz, de 25 kVA a 3150 kVA con tensión elevada para material hasta 36 kV. Parte 1 :Requisitos generales. Sección 1 : Requisitos para transformadores bitensión en alta tensión;
- UNE 21428-1-2 - Transformadores trifásicos de distribución sumergidos en aceite, 50 Hz, de 25 kVA a 3150 kVA con tensión elevada para material hasta 36 kV. Parte 1 :Requisitos generales. Sección 1 : Requisitos para transformadores bitensión en baja tensión;
- UNE 21428-1-3 - Transformadores trifásicos de distribución sumergidos en aceite, 50 Hz, de 25 kVA a 3150 kVA con tensión elevada para material hasta 36 kV. Parte 1 :Requisitos generales. Sección 1 : Requisitos para transformadores bitensión en alta tensión y bitensión en baja tensión;
- UNE 207019 IN - Modelo único de protocolo de ensayos individuales para transformadores de distribución MT/BT;
- UNE 48103 - Pinturas y barnices. Colores normalizados;

- ENDESA Technical Specification 6700496 (Thermometer).

4.4.5 Italia

- UNEL 38137-67 (DIN 43675)
- EN 10279

4.4.6 Peru

4.4.7 Romania

- UNEL 38137-67 (DIN 43675)
- EN 10279

5 ORGANIZATIONAL PROCESS POSITION IN THE PROCESS TAXONOMY

Value Chain/Process Area: Engineering and Construction

Macro Process: Devices and Components Development

Process: Standard Catalog Management

6 DEFINITIONS AND ACRONYMS

Acronym and Key words	Description
Manufacturer Product	Component manufactured by a Supplier in accordance with a technical specification
Technical Conformity Assessment (TCA)	A "conformity assessment"[1] with respect to "specified requirements"[2] consists in functional, dimensional, constructional and test characteristics required for a product (or a series of products) and quoted in technical specifications and quality requirements issued by Enel Group distribution companies. This also includes the verification of conformity with respect to local applicable regulation and laws and possession of relevant requested certifications
Conformity assessment body	Body that performs the conformity assessment activities [ISO 17000]
Enel Equipment Key code	It's an equipment representative for a group (family) of similar equipment chose by Enel
Enel Equipment Family code	Equipment belonging to a specific group (family) in which another equipment is identified as key code

[1] Definition 2.1 of ISO/IEC 17000
[2] Definition 3.1 of ISO/IEC 17000

TCA systems	The “conformity assessment systems”, is applicable specifying that the rules and procedures to carry on the TCA are those specified in the present document
Type A documentation	Not confidential documents used for product manufacturing and management from which it is possible to verify the product conformity to all technical specification requirements, directly or indirectly
Type B documentation	Confidential documents used for product manufacturing and management where all product project details are described, in order to uniquely identify the product object of the TCA
TCA report	Document describing the activities carried out for TCA
TCA dossier	Set of final documents delivered by the Supplier for the TCA
Material LifeCycle Management (MLM)	Integrated IT platform to manage the processes of Technical Specifications (TSM), Technical Conformity Assessment (TCA), Quality Control Tools (QCA), Defects Managing (CMD), Warranties and Materials Shipping (MSH)

7 DESCRIPTION

This document is applicable for liquid immersed transformer, three-phase, bi-phase and single-phase for indoor and outdoor.

This document is structured as follows:

- The "Common Part" (CP) with the common requirements for all the Enel Group Distribution Companies;
- The "List of Components" (Annex A) with the Type Code for each transformer of the Enel Group Distribution Companies. The "List of Components" corresponding to each Local Section may be revised without revision of this Standard.";
- The "Technical Offer" form (Annex B) with the main technical data to be submitted during the tender;
- The "Local Sections" (from Annex C to Annex J) with the additional prescriptions or integration, with the same corresponding clause or sub-clause number, providing the specific requirements of each Enel Group Distribution Company at country level.

7.1 Service conditions

Unless otherwise specified the normal service conditions defined in IEC 60076-1 apply with the following exceptions:

Country/DSO	*Altitude (m)*	*Pollution level (IEC 60815)*	*RUSCD (mm/kV)*	*Seismic Req.*[(1)]	*Network Frequency*	*Ambient Temp (Min/Max)*	Corrosivity (ISO 12944)
Argentina	--	Medium	34,7	--	50 Hz	-10/+40 ºC	C3
Brazil/Ceará	--	Very heavy	53,7	--	60 Hz	0/+40 ºC	C5
Brazil/Rio	--	Very heavy	53,7	--	60 Hz	0/+40 ºC	C5
Brazil/Sao Paulo	--	Heavy	43,3	--	60 Hz	0/+40 ºC	C4
Chile	--	Medium	34,7	0,5g	50 Hz	-10/+40 ºC	C3
Colombia	2700	Medium	34,7	0,5g	60 Hz	-10/+40 ºC	C3
Italy	--	Heavy	43,3	0,5g	50 Hz	--	C4
Peru	--	Very heavy	53,7	0,5g	*60 Hz*	0/+40 ºC	C5
Romania	--	Heavy	43,3	0,5g	50 Hz	-30/+40 ºC	C4
Spain	--	Heavy Very heavy	43,3 53,7[(2)]	--	50 Hz	--	C4 C5

(1) Indications of the specific seismic qualification, are given in Local Sections

(2) Canarias Islands

Table 2 – Service conditions

7.2 Ratings

For the definitions IEC 60076-1 applies.

7.2.1 Type of transformers

This document is applicable for liquid immersed transformer, three-phase, bi-phase and single-phase.

For further details see List of components.

7.2.2 Number of windings

Two.

For further details see Local Sections.

7.2.3 Number of phases

See List of Components.

7.2.4 Cooling system

See List of Components.

7.2.5 Rated power

Preferred Rated Powers shall be: 50, 100, 160, 250, 400, 630, 800, 1000 kVA.

See List of Components for other possible values.

7.2.6 Rated voltages

Preferred Rated Voltages shall be in accordance with criteria given in ENEL Group (Policies).

See List of Components for other possible values.

7.2.7 Rated frequency

See List of Components.

7.2.8 Voltage regulation

Preferred value is Un ±2x2,5%.

See List of Components for other possible values.

7.2.9 Windings connections

See List of Components.

7.2.10 Installation

The type of installation can be indoor or outdoor.

Transformers are generally used for step-down voltage purpose, but they can also be used as step-up. In the network, they could occasionally be subjected to frequent energizations, overvoltages and short-circuits.

7.2.11 Insulation levels

See List of Components, where specific rated insulation levels are defined for MV and LV side.

- U_m is the highest voltage for the equipment;
- LI is the lightning impulse withstand voltage;

- AC is the short duration induced and separated source AC withstand voltage.

7.2.12 Losses, short circuit impedances and sound power levels

See List of Components and Local Sections.

For Enel Group Distribution Companies in Chile, Colombia, Iberia/Spain, Italy, Peru, Romania, the maximum losses (no-load and load losses) values shall be in compliance with EU Regulation, and with standard series EN 50708.

7.2.13 Temperature rise

See IEC 60076-2.

7.2.14 Capability to withstand short-circuit

Transformers shall be able to withstand the short-circuit test in compliance with IEC 60076-5.

7.2.15 Overloading

Transformers shall withstand overloading in the conditions specified in IEC 60076-7.

7.2.16 Sound levels

See List of Components.

7.2.17 Overall dimensions and layout

See List of Components and Local Sections.

7.2.18 Rating plates

In compliance with IEC 60076-1.

For European countries, additional requirements are given in EN 50708-1-1.

Transformers shall have two plate-holders on the long sides of the transformer. Plate-holders, even if mobile, shall be fixed to the transformer in a way allowing the complete painting of all parts that are behind them. Fixed plate-holders shall not be welded to the fins.

The rating plates shall be resistant to atmospheric conditions and made of waterproof material.

The rating plates should be in local languages of the country of destination of the transformer.

For further details see Local sections.

7.2.19 Tolerances

See IEC 60076-1 and Local Regulation.

7.3 Design requirements

Unless otherwise specified, the transformers shall comply with IEC 60076-1; the single parts of the transformers shall comply with the relevant standards.

7.3.1 Core

The core shall be made wrapped type or cold rolled magnetic strips. The material shall be grain oriented or amorphous.

7.3.2 Windings

The windings shall be made of electrolytic copper of 99.9% purity or aluminum conductors of at least 99.5% aluminum content; the cross section of windings shall be constant.

The star point of the LV windings shall be made on the connections of the layer or turn nearer to the insulating liquid duct between LV and MV windings (this requirement does not apply to Spain).

The enameled insulated conductors shall refer to IEC 60317 as guidelines.

The ties of joints and connections from the windings to the bushings or to the de-energized tap-changer shall be manufactured in order to prevent the damaging of the conductor insulation during transformers lifetime.

For Italy, Peru, Spain and Romania for rated power up to 160 KVA it is mandatory to manufacture the windings in aluminum.

7.3.3 Tank

The tank shall be made of steel sheets and shall not permit stagnation of water on the cover.

The tank can be provided sealed (without conservator), with full insulating liquid filling or with gas-cushion.

The coupling tank-cover shall be made by using a seal gasket, stainless steel fixing screws and washers, and brass or hot zinc-plated nuts.

In the sealed solution, the coupling by uninterrupted welding is also acceptable.

The tank shall be provided with standing and sliding devices, and with lifting and blocking devices as specified in the following.

The whole tank, the cover and the accessories shall be uninterruptable connected (galvanic contact).

The cooling system is considered an integral part of the tank. Transformers for pole mounted installation shall have the tank side facing the pole (usually the low voltage side) without cooling elements or corrugated fin wall panels, or within the maximum dimensions of the cover. The cooling elements or corrugated fin wall panels, in the tank side facing the pole (usually in the low voltage side) shall be within cover dimensions, in order to bring the barycenter of transformer as close as possible to the pole.

One clearly visible warning label shall be placed on the cover and near to the De-Energized Tap-Changer (DETC), indicating in local language:

- “WARNING DO NOT OPERATE WHILE THE TRANSFORMER IS ENERGIZED”;
- in case of totally filled or gas-cushion transformer, “DO NOT OPEN TOTALLY FILLED TRANSFORMER” or “DO NOT OPEN GAS-CUSHION TRANSFORMER”, respectively.

7.3.4 Insulating liquid and material

The insulating liquids shall be accordingly to IEC 60296. Type TVBU (not-inhibited), usually in Europe, or TVBT (partially inhibited) if not otherwise agreed.

The insulating liquid shall not contain PCB.

It is forbidden the use of any insulating liquid which presents characteristics such that to make it be classified as dangerous substance. Alternatively insulating liquids, as natural and synthetic ester, can be specified, according to IEC 62770 or IEC 61099. In such case, it is possible to reference to IEC 60076-14. Any part of the transformer which is in contact with the insulating liquid shall be compatible with it.

Insulating liquid supplier and type shall be clearly indicated in the rating plate and in the manual.

In case of ester liquid the transformer shall be provided with a plate in order to indicate the liquid type (natural, ester, synthetic ester).

When prescribed, maximum liquid quantity insulated are given in Local Section.

The solid insulation material used shall be in compliance to class “A” of IEC 60085 or higher. The evaluation of the material should be carried out in accordance with the IEC 60641-2.

Further specific requirements are requested in Local Sections.

7.3.5 Liquid insulating filling and sealing procedures

The filling and sealing of the transformer shall be done as stated by the Manufacturer in the Production and Control Plan and shall be submitted to quality control.

7.3.6 Bushings

Bushing shall be in compliance with their relevant standards.

The MV bushings shall be fixed to the tank cover by using stainless steel studs, washers, and nuts (or brass or hot galvanized steel nuts) and light metal alloy or stainless-steel spacers and flanges.

Each MV and LV bushing shall be prearranged for sealing, by one drilled stud or two nuts.

Indications about bushing identifications and markings are reported in Local Sections.

The following solutions are defined for Medium Voltage and Low Voltage bushings.

7.3.6.1 MV bushings

Solution	MV Bushing
1	EN 50180 -- type 24-250/P3
3	EN 50180 -- type 36-250/P3
4	EN 50180 inside cone plug-in [Fig. A]

5	EN 50180 outside cone plug-in: - 24 kV interface type A - 36 kV interface type B
6	IEC 60137 (porcelain or polymeric)

7.3.6.2 LV bushings

Solution	LV Bushing
1	EN 50386 - type 1)
2	EN 50386 - type 3)
3	EN 50386 - type 4)
4	EN 50386 - type 5)
5	EN 50386 - type 6)
6	Bus-bar (EN 50387) [Fig. B] without insulating protection
7	Bus-bar (EN 50387) [Fig.B] + insulating protection [Fig.C] – Assembly [Fig.D]
8	IEC 60137

7.3.7 De-energized tap-changer for MV voltage regulation

De-Energized Tap-Changer (DETC) shall be in compliance with IEC 60214.

Unless otherwise indicated in Local Sections, the knob of the tap changer shall be located on the cover.

The knob drives of the tap-changer shall have the markings turning to decreasing position by moving in a clock-wise direction (for example: +2, +1, 0, -1, -2, …). The DETC shall be designed in order to avoid the possibility to be set on an intermediate position between two prescribed positions. It shall be mechanically locked only in correspondence of operating positions. The prescribed positions are indicated in the List of Components.

The position markings shall be inerasably engraved on an aluminum plate with 10 ÷ 20 mm text size. They shall also be positioned in a way that the reading of the connected tapping shall be possible from the low-voltage side of the transformer in operation. The knob drives and marking positions shall be resistant to atmospheric conditions and made of waterproof material.

The knob of the DETC shall be designed for blocking in any chosen position by a padlock.

The control shaft of the DETC shall be made of stainless steel or suitable insulating material; in the first case it shall be connected to earth under the cover.

7.3.8 De-energized tap-changer for MV voltage commutation

Transformers with two primary voltages shall be provided with an off-circuit changer for the commutation of the MV operating voltage.

The DETC shall be operated when the transformer is disconnected from the network.

The changer has to be mechanically locked only in correspondence of the operating position.

The positions of the changer shall bear markings showing the value of the operating voltage; these markings shall be engraved on a plate by characters 10÷20 mm in size. The knob drives and marking positions shall be resistant to atmospheric conditions and made of waterproof material.

The knob of the DETC shall be designed for locking in both positions by a padlock.

The control shaft of the DETC shall be made of stainless steel or suitable insulating material; in the first case the shaft shall be connected to earth under the cover.

7.3.9 Supporting and sliding devices

Transformers shall be provided with supporting and sliding devices.

7.3.9.1 Supporting

In case of fixing brackets for single-pole mounted transformer, they should be placed on the LV side.

7.3.9.2 Sliding devices

In case of wheels (see List of Components), the manufacturer's name and the maximum permanent load shall be engraved on each roll. These shall be adjustable, in two perpendicular directions, for longitudinal and transversal displacements.

Pivots shall be made of stainless steel, and their forks shall be made of steel, painted or cured against corrosion. The coupling between forks and the relative rod shall be assembled by stainless steel screws, nuts or hot zinc-plated steel washers.

During transport the complete wheels (wheel + pivot + fork) shall be removed from their normal operating position, and shall travel together with the transformer, in a position that will not cause damage to the protective covering of the transformer.

In case of sliding devices without wheels (see List of Components), at the base of the tanks should be placed rails or profiles which serve as fixing means and / or allowing a minimal height over the floor during storage, according to the weight of the equipment.

Further information required in Local Sections.

7.3.10 Protective painting

The external painting of transformers and metallic components made of iron materials, shall use liquid epoxy or/and polyurethane paints and varnishes according to ISO 12944 (standardized paint systems) or powder coating.

Pollution Levels	Corrosivity	Durability	Painting Category
Medium	C3	Medium	***C3M***
Heavy	C4	Medium - High	***C4M or C3H***
Very Heavy	C5	Medium - High	***C5M or C4H***

Internal surfaces of the transformers shall be protected by a hot insulating liquid resistant painting (epoxy-polyamine or powder coating or equivalent) having at least a thickness[1], ≥ 30 µm.

[1] Total Dry Nominal Thickness according to NDFT and its acceptance criteria, as stated in ISO 19840 and ISO 2808.

All the surfaces to be painted shall be prepared by Manufacturer with a suitable sandblasting or chemical cleaning (degreasing) treatments, specific for the painting cycle adopted. The effectiveness of surface preparation work shall be assessed using standards from series ISO 8501: Preparation of steel substrates before application of paints and related products -- Visual assessment of surface cleanliness --.

The paint must be free of lead oxides or chromates. The safety and technical data sheets of the painting shall be provided by the Manufacturer.

The color to be used is prescribed in Local Section.

The Coating System/Painting cycle shall be:

- Totally defined in terms of products, typologies and processes.
- Certified with the reference to tests carried out by independent laboratories, in compliance to ISO 12944, with a clear indication of Corrosivity and Durability levels.

7.3.11 Accessories

Each transformer shall be provided with the accessories as indicate:

Accessory	Totally filled transformers	Gas cushion filled transformers
Lifting and blocking devices	X	X (1)
Oil drain and sampling plug or valve	X	X
Thermometer pocket	X	X (1)
Thermometer	X (1)	X (1)
Overpressure valve		X (1)
Oil level indicator		X (1)

Supports for surge arresters	X (1)	X (1)
Earthing terminals	X	X
Rating plate	X	X
Filling hole and plug (filling cap)	X	X
Protection device (e.s type DGPT)	X (2)	

(1) Only if specifically required

(2) If requested, only for rated power transformers >1000 kVA

Accessories' protective coating shall be in accordance with the corrosivity, and durability indicated for each transformer.

7.3.11.1 Lifting and blocking devices

Transformers shall be provided with 2 (two) eyebolts for the lifting of the complete transformer of a minimum diameter of 60 mm. The eyebolts will allow fastening the suspension of the transformer, in such way as not to damage the bushing insulators of the terminals and accessories and ensure the suspension of the transformer in a horizontal position. These two eyebolts shall be positioned in compliance with Local Section.

Furthermore 4 (four) blocking eyebolts shall be provided in the upper part of the tank for the blocking of transformers during transport. These four blocking eyebolts shall have a minimum diameter of 24 mm and shall be positioned in a way that, when in use, they will not damage accessories and cooling system.

7.3.11.2 Liquid draining plug

Unless otherwise indicated in Local Sections, transformers shall be provided with an insulating liquid drain device and sampling plug or valve complying with IEC 60076-22-7 (previous EN 50216-4 and DIN 42551) type C2.

The liquid drain device, sampling plug or valve, shall be provided with a security seal.

Unless otherwise indicated in Local Sections, this device shall be placed at the bottom of the tank on the left short side looking at the transformer from the MV bushings side.

7.3.11.3 Thermometer pocket

Transformers shall have a thermometer pocket to allow the measuring of the top- insulating liquid temperature. This pocket shall be placed as shown in the IEC 60076-22-7 (previous EN 50216-4) (type A1). The pocket shall be provided with a corrosion-proof cap. The thread shall be protected with silicone-grease.

7.3.11.4 Thermometer

See Local Sections.

7.3.11.5 Overpressure valve

The pressure relief valve shall be installed on the transformer cover and the design shall be such that it does not permit the accumulation of dirt that could interfere in its calibration and/or operation.

For further details see Local Sections.

7.3.11.6 Liquid level indicator

The liquid level indicator, which should be magnetic with a circular sight glass, should be located on the upper part of the tank side.

7.3.11.7 Support for surge arresters

If required, the transformer must be provided of a support (one each phase) for the installation of medium voltage arresters. The structures may be welded or bolted to the tank or fixed by the bolt, nut and washer of the tank-cover coupling hardware. The material used for brackets, bolts, nuts and washers shall be carbon steel hot dip galvanized.

The surge arresters are not considered in the supply.

See Local Sections and List of Components.

7.3.11.8 Earthing terminals

Transformers shall be provided with two stainless steel earthing terminals complying with IEC 60076-22-7 (Type B1). Only one of these terminals needs to be complete with stainless steel washer and screw.

These terminals shall be placed at the tank bottom.

They shall be countersigned by labels, glued on the tank wall, showing the earth symbol complying with 60076-22-7. The terminal shall be identified by the letter "E" either on the terminal itself or on its vicinity.

For Spain and Italy additional requirements are given in Local Sections.

7.3.11.9 Rating plates and plate-holders

See Local Sections.

7.3.11.10 Filling hole and plug (filling cap)

The filling cap shall be provided with a security seal.

For further details, see Local Sections.

7.3.11.11 Protection device (e.s type DGPT)

See Local Sections.

7.3.12 Identification of accessories and components

All components and accessories, tap changers, MV and LV bushings, sliding, wheels, tank, cooling system, etc. shall have the name or the mark of their Manufacturer.

7.4 Exceptions

Possible exceptions to the present prescriptions, concerning the adoption of technical and/or manufacturing aspects different from the ones prescribed in the present GS, can be evaluated by the Distribution company. In such a case, the Distribution company will take into account the opportunity to require additional tests with regard to the technical/manufacturing proposed solutions.

Such exceptions can be approved only by the Distribution company.

7.5 Documentation

7.5.1 Document for the offer

The technical documentation to be produced by the Supplier for the economical offer shall contain the following items:

- The data in the Annex C with the documentation requested;
- The Overall Drawings with all the relevant details (in local language);
- The drawing of the Rating Plate (in local language).

The full compliance to the prescriptions indicated in this document and relevant standards of the main components and the accessories shall be ensured by the Manufacturer.

Each exception to this Global Standard and to the related ones shall be expressly evidenced in the Annex C during the technical offer submission, otherwise it will not be considered.

7.5.2 Documentation for the technical conformity assessment (TCA)

The procedures concerning the technical conformity assessment (TCA) and all the activities required are described in GSCG002 “TECHNICAL CONFORMITY ASSESSMENT”.

The Supplier, for each transformer type code to be subjected to TCA, shall make available a complete documentation containing calculations, drawings, schemas, pictures of the MV and LV side, internal and external, descriptions, list of characteristics, performances, assembling, maintenance, and operational norms and whatever necessary for the complete acknowledgment of the transformer.

7.5.2.1 Not-reserved documentation (Type A)

This is the documentation specific for Distribution Transformers, according to indicated in GSCG002.

It shall contain at least:

1. List of Type A and B (reserve: calculation, manufacturing drawings, …) documents.

2. Overall drawings of the completely assembled transformer, including accessories.
3. Drawing of the Rating Plates and labels.
4. Corresponding Datasheet, if requested.
5. Components, materials, and accessories certificates.
    - Mineral oil / ester
    - Aluminum/copper foil
    - Aluminum/copper wire
    - Solid insulation
    - Tank Steel
    - Liquid draining plug
    - Overpressure valve
    - Magnetic steel
    - Tap changer
    - Gaskets
    - HV bushings
    - LV bushings
    - Paint
    - Screws nuts
    - Thermometer
    - Wheels or sliding devices
    - Earthing terminals
    - Protection device
6. Manual of the Transport, Installation, Operation and Maintenance (in local language)
7. List of the Suppliers of the TR Materials (copper, insulating materials (internal, external), cores, housing, …).
8. Test Table according to Annex A of GSCG002 in force, (Test Table; applicability table and applicability report, if any).
9. Pictures of the Assembled Transformers (four side views and view from the top).
10. Documentation of painting system and related certification and tests of the painting supplier.
11. Additional Obligations
12. BIM documents

Further documents can be requested (in case that visual inspections of the prototypes cannot be attended), such as pictures/photos of accessories and plates, specific parts of the transformers, and their components, etc.

7.5.2.2 Reserved documentation (Type B)

It is the documentation considered reserved, according to indicated in GSCG002, of which the Manufacturer does not authorize the diffusion, used to completely identify the design and the manufacturing of the transformer; it shall include all the elements required in this GS and the documentation of the origins of the materials not reported in "not-reserved documentation". Such documentation will be overviewed by the companies representatives or by the certification body during the Technical Conformity Assessment and will be archived by the Manufacturer.

7.5.3 Documents for delivering

For general purpose, every transformer manufactured for Enel Gridsgroup shall be delivered with its own related information:

- A transformer Manual of the Transport, Installation, Operation and Maintenance (in local language);
- Legal Declarations and/or Legal Certificates according to local laws in Local Section, if requested.

7.6 Tests

Unless otherwise specified IEC 60076-1 applies.

7.6.1 List and classification of tests

7.6.1.1 Routine tests

1) Check of the correspondence with the approved prototype
2) Measurement of winding resistance.
3) Measurement of voltage ratio and check of phase displacement.
4) Measurement of short-circuit impedance and load loss.
5) Measurement of no-load loss and current.
6) Dielectric routine tests (IEC 60076-3).
    a. separate-source power-frequency voltage withstand test for MV and LV windings
    b. induced AC withstand voltage test
7) Leak testing with pressure for liquid-immersed transformers (tightness test)
8) Insulating liquid tests (IEC 60422)
9) Test on de-energized tap-changers
10) Measurement of coating thickness.
11) Insulation of auxiliary wiring (for rated power transformers >1000kVA)

7.6.1.2 Type tests

1) Verification of the compliance to the specification requirements
2) Temperature-rise type test (IEC 60076-2).

3) Dielectric type tests (IEC 60076-3)
4) lightning impulse test
5) Determination of sound level (IEC 60076-10).
6) Measurement of no-load loss and current at 90 % and 110 % of rated voltage.
7) Cross-cut test: ISO 2409.

7.6.1.3 Type tests on accessories

1) Tests concerning pressurized corrugated tanks
2) Check of the de-energized Tap Changer
3) Mechanical tests on wheels

7.6.1.4 Special tests

1) Determination of capacitances windings-to-earth, and between windings
2) Short-circuit withstand test (IEC 60076-5)
3) Mechanical strength of brackets for fixing transformers, if required

7.6.1.5 General statements for the tests

For Certification, Technical Conformity Assessment or Approval, the indicated routine tests, type tests and special tests shall be performed according to the given criteria, if not otherwise specified.

Further tests in addition to ones listed above can be requested to the transformers manufacturer in case of particular technologies adopted.

7.6.1.5.1 Criteria for routine tests

With reference to par 7.6.1.1 the routine tests shall be performed on each transformer.

7.6.1.5.2 Criteria for type and special tests

With reference to par. 7.6.1.2, 7.6.1.3, 7.6.1.4, type tests and special tests shall be performed on one unit for each set of identical transformers which have the same type code, if unless otherwise specified in a specific document at the tender stage.

<u>Type test on accessories shall be performed with the following exceptions:</u>

- test 7.6.1.3; 1): Tests concerning pressurized corrugated tanks shall be performed on the two most stressed tanks of the series of the same sub-supplier.

  NOTE: to identify the most stressed tanks, the ratio “oil volume in the corrugate wings/total oil volume”, shall be calculated. The two tanks with the highest and the lowest ratios shall be tested. The results are considered also valid for the other tanks if the calculated over pressure at rated power do not exceeds the over pressure resulting from the two most stressed tanks tested.

- test 7.6.1.3; 3): Mechanical tests on wheels shall be performed for every wheels sub-supplier;

Special tests shall be performed with the following exceptions:

- test 7.6.1.4; 2): Short-circuit withstand test (IEC 60076-5) shall be performed on representative (Key codes) transformer. test 7.6.1.4; 3): Mechanical strength of brackets for fixing transformers, when required Local Section shall be performed on one unit by rated power.

7.6.2 Tests description

7.6.2.1 Routine tests

7.6.2.1.1 Check of the correspondence with the approved prototype

The ratings and the design requirements of the transformer under test (including active part of the transformers, bushings, tap changer, accessories, etc.) shall be compared with the approved prototype drawings.

The visual inspection shall also be performed in order to verify the absence of defects.

7.6.2.1.2 Measurement of winding resistance

According to IEC 60076-1 § 11.2.

7.6.2.1.3 Measurement of voltage ratio and check of phase displacement

According to IEC 60076-1 § 11.3.

7.6.2.1.4 Measurement of short-circuit impedance and load loss

According to IEC 60076-1 § 11.4.

7.6.2.1.5 Measurement of no-load loss and current

According to IEC 60076-1 § 11.5

7.6.2.1.6 Dielectric routine tests

According to IEC 60076-3. In case of two primary rated voltages with different insulation levels, the dielectric tests shall be performed for each voltage level.

7.6.2.1.6.1 Separate-source power-frequency voltage withstand test for MV and LV windings

7.6.2.1.6.2 Induced AC withstand voltage test

7.6.2.1.7 Leak testing with pressure for liquid-immersed transformers (tightness test)

According to IEC 60076-1 § 11.8.

For totally filled transformers the maximum over pressure P+ (reference EN 50464-4) shall be maintained for 8 hours. At the end of the test the transformer shall not show leakages. After the test the pressure value shall be restored at the rated value.

7.6.2.1.8 Insulating liquid tests

The manufacturer shall provide the following certificates/test report, depending on the insulating liquid:

Mineral oil:

1) The certificate of the supplier of the liquid, containing all the parameters prescribed in the IEC 60296 – Table 2 (PCBs included), with the following additional indication. The supplier of the liquid shall declare possible anti-oxidant additives (type and concentration; “TVBT” classification - partially

inhibited), if they are present, or the absence of anti-oxidant additives shall be verified (IEC 60666 - verification of the "TVBU" classification - not-inhibited mineral liquid).

2) The liquid tests according to IEC 60422–Table 3 (acceptance and type test where applicable) made on the same batch of liquid used in the transformer (each impregnating lot), under the transformer manufacturer responsibility. This example should be made previously or after the acceptance test.

Natural esters:

1) The certificate of the supplier of the liquid, containing all the parameters prescribed in the IEC 62770 – Table 1 (PCBs included), with the following additional indication.
2) The liquid tests according to IEC 62975 –Table 3 (acceptance and type test where applicable) made on the same batch of liquid used in the transformer (each impregnating lot), under the transformer manufacturer responsibility. This example should be made previously or after the acceptance test.

Synthetic esters:

1) The certificate of the supplier of the liquid, containing all the parameters prescribed in the IEC 61099 – Table 1 (PCBs included), with the following additional indication.
2) The liquid tests according to IEC 61203 –Table X (acceptance and type test where applicable) made on the same batch of liquid used in the transformer (each impregnating lot), under the transformer manufacturer responsibility.

For the PCB absence it is mandatory to perform the verification in a laboratory accredited ILAC or IAF in compliance with the test method of IEC 61619 with the indication of the transformer sampled. The detectability value of the analytic method shall be at least 2 mg/kg (2 ppm) to assure the respect of the parameters reported in table 3 of IEC 60422.

7.6.2.1.9 Test on de-energized tap-changers

The correct operation of the DETC (for regulation and for commutation) shall be checked by manually movement on the complete range of positions.

7.6.2.1.10 Measurement of coating thickness

Measurement of coating thickness in compliance with ISO 2808 or ISO 2178 "Measurement of coating thickness", according to the specific Painting System.

7.6.2.1.11 Insulation of auxiliary wiring (for rated power transformers >1000kVA)

According to IEC 60076-3 §10.

7.6.2.2 Type tests

7.6.2.2.1 Verification of the compliance to the specification requirements

The verification of compliance shall be executed through the comparison between the characteristics and the documentation of the transformer under test stated by the Manufacturer, and the requirements stated in the

present GS (including the relevant Local Sections) concerning the ratings and the design (accessories, painting cycles, etc.).

This Test shall be reported in the list of the tests with a specific test report.

The visual inspection shall also be performed in order to verify the absence of imperfections and defects.

7.6.2.2.2 Temperature-rise type test
According to IEC 60076-2.

7.6.2.2.3 Dielectric type tests
7.6.2.2.3.1 Lightning impulse test
According to IEC 60076-3.

7.6.2.2.4 Determination of sound power level
According to IEC 60076-10.

7.6.2.2.5 Measurement of no-load loss and current at 90 % and 110 % of rated voltage
According to IEC 60076-1.

7.6.2.2.6 Cross-cut test
According to ISO 2409.

7.6.2.3 Type tests on accessories
7.6.2.3.1 Tests concerning pressurized corrugated tanks
According to EN 50464-4.

7.6.2.3.2 Check of the De Energized Tap Changer
According to IEC 60214-1.

7.6.2.3.3 Mechanical tests on wheels
The mechanical characteristics specified shall be verified

The wheels shall have the following mechanical characteristics:

permanent maximum load:	20 kN
short duration maximum load:	80 kN
transversal static thrust:	2 kN

7.6.2.4 Special tests
7.6.2.4.1 Determination of capacitances windings-to-earth, and between windings
According to IEC 60076-1.
7.6.2.4.2 Short-circuit withstand test
According to IEC 60076-5.
7.6.2.4.3 Mechanical strength of brackets for fixing transformers, if required
See Local Sections.

7.7 Guarantee

The transformer guaranty is for a minimum period of 5 years, if not otherwise agreed.

The Manufacturer must also issue a five-year guarantee (starting from the date of the end the acceptance tests with positive result). At the end of this period of guarantee, there it must not be rust on more than 1% of the entire painted surface; this compares to a rusting level not above the Ri3 (see ISO 4628-3).

7.8 Transport and packing

It shall be care of the Manufacturer to provide the loading of vehicles. This applies even in case where transports are made using vehicles belonging to Distribution Company. More information may be given in other specific documents.

Packing for transportation and storage (which does not take part in the technical conformity assessment process) shall be compliant to the documents referring of each Country.

For further information see Local Section.

7.9 Other local issues

When necessary, they are specified in Local Sections.

7.10 Figures

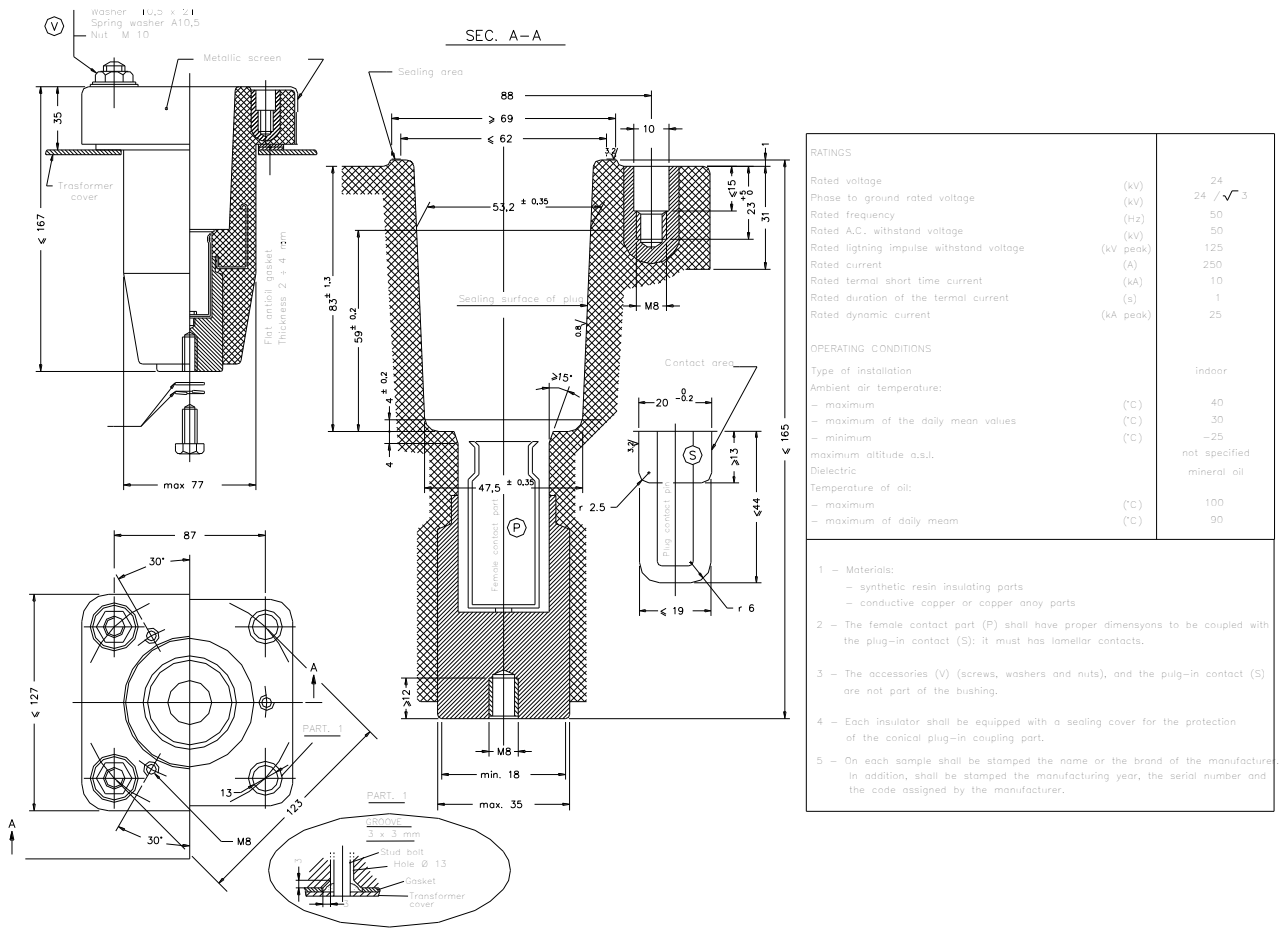

Figure 1 MV Bushing "Plug-in inside cone"

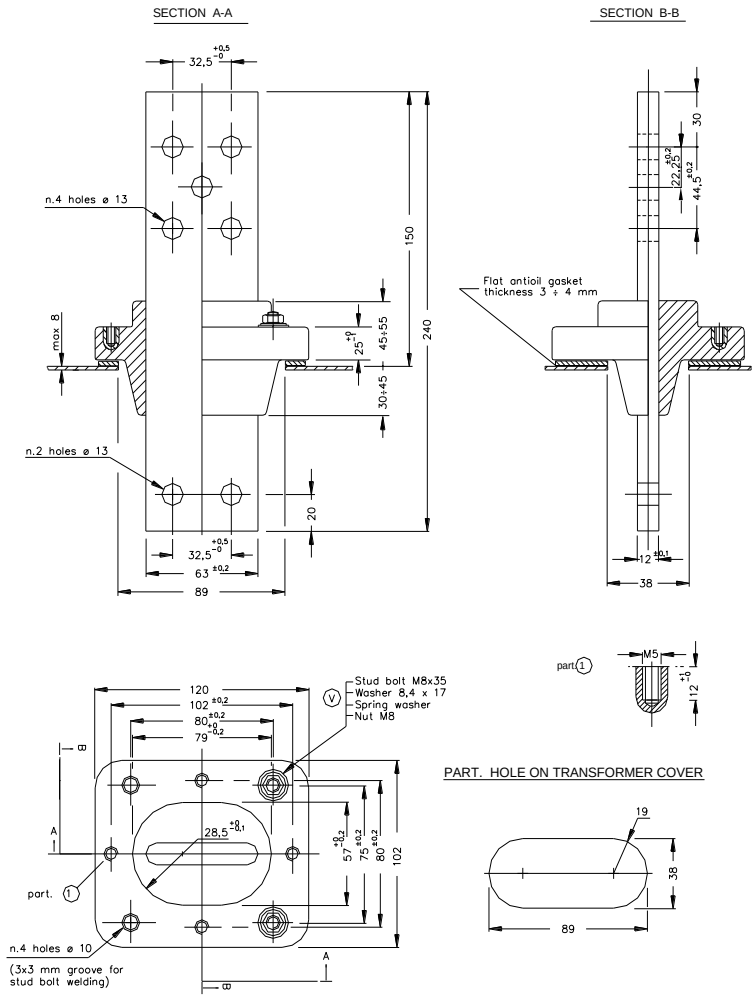

RATINGS		
Rated voltage	(V)	1000
Phase to ground rated voltage	(V)	1000 / √3
Rated frequency	(Hz)	50
Rated A.C. withstand voltage	(kV)	10
Rated lightning impulse withstand voltage	(kV peak)	20
Rated current	(A)	1600
Rated termal short time current	(kA)	16
Rated duration of the termal current	(s)	1
Rated dynamic current	(kA peak)	40
OPERATIONAL CONDITIONS		
Room air temperature:		
– maximum	(°C)	40
– maximum of the daily mean values	(°C)	30
– minimun	(°C)	–5
Type of installation		indoor
Dielectric		mineral oil
Temperature of the oil:		
– maximun	(°C)	100
– maximun of the daily mean values	(°C)	90

1 – Materials:
– syntetic resin insulating parts
– conductive copper part.

2 – Accessories (V) (Stud bolts, washers and nuts) are not part of the insulator.

3 – On each sample shall be stamped the name or the brand of the manufacturer. In addition, shall be stamped. the manufacture year, the serial number and the code assigned by the manufacturer.

Figure 2 LV Bushing "Bus-bar"

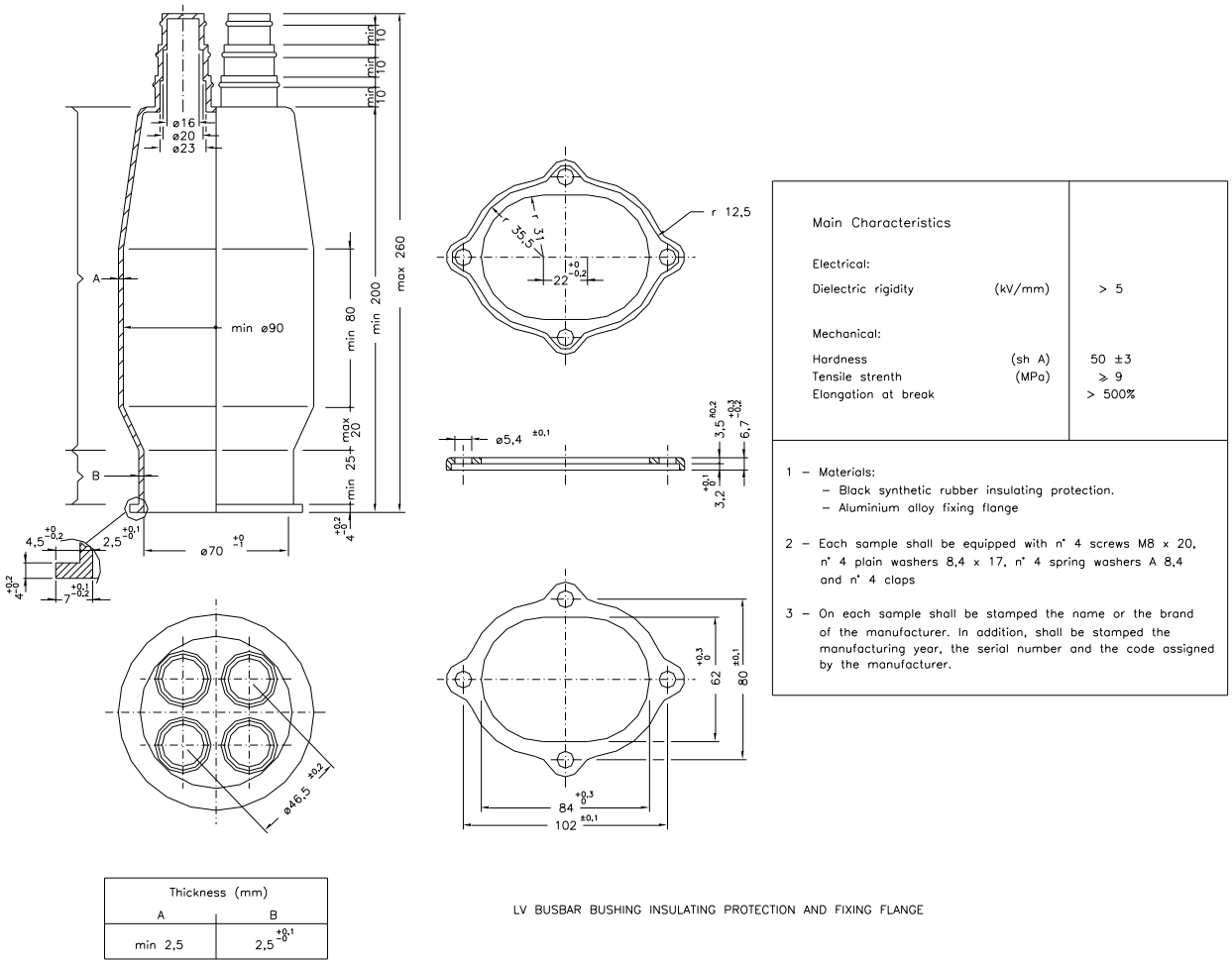

Figure 3 LV Bushing "Bus-bar" insulating protection

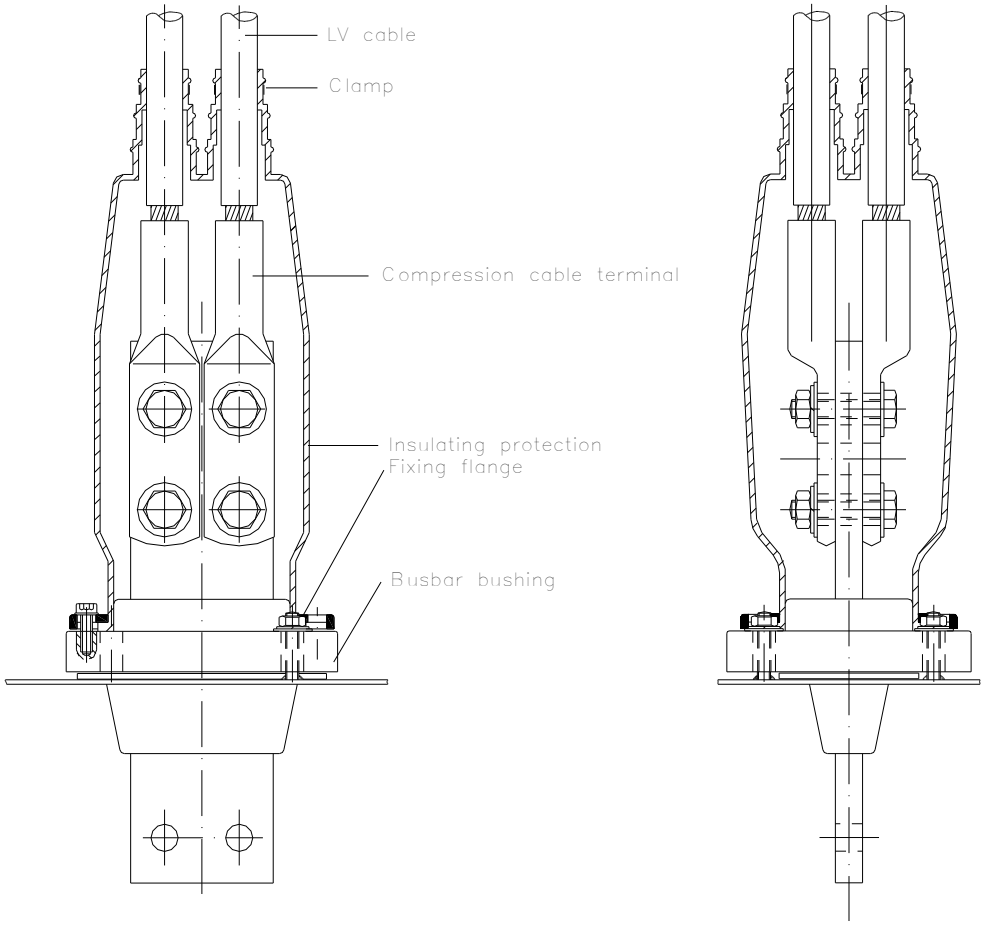

Example of realization of insulated connection between busbar bushing and LV cables.

Figure 4 Assembly LV Bushing "Bus-bar" and insulating protection

ANNEXES

ANNEX A: LIST OF COMPONENTS

GS Type Code (**)	Country	Country Code	Rated Power (kVA)	Cooling System	Rated MV (kV)	Volt. Reg. (steps number x step %)	Rated LV (kV)	MV insulation level Um/LI/AC (kV)	LV Insulation level Um/LI/AC (kV)	f (Hz)	N. of phases 1P, 2P, 3P	Connection Symbol	Zsc (%)	MV bushing type (ref. GS p. 6.5.1)	MV Minimum creepage distance (mm)	LV bushing type (ref. GS p. 6.5.2)	Losses classes or max values	Load Loss (W)	No Load Loss (W)	Noise level - Sound Power (dB)	Wheels (Yes/ No)	Overall dimensions HxLxW (mm)	Maximum weight (kg)	Service conditions - Pollution level (ref. GS p. 4)	Painting (ref. GS p. 6.9)	Brackets for pole (Yes/ No)	Brackets for arrester (Yes/ No)
GST001/1040	Italy	110045	50	ONAN	15	±2x2.5%	0,42	17.5/95/38	1.1/--/10	50	3P	Dyn11	4	Sol. 1	600	Sol. 1	Ak Ao-10%	750	81	39	No	1500x1200x750	1250	Heavy	C4M	No	No
GST001/1040N	Italy	110046	50	KNAN	15	±2x2.5%	0,42	17.5/95/38	1.1/--/10	50	3P	Dyn11	4	Sol. 1	600	Sol. 1	Ak Ao-10%	750	81	39	No	1500x1200x750	1250	Heavy	C4M	No	No
GST001/1041	Italy	110049	100	ONAN	15	±2x2.5%	0,42	17.5/95/38	1.1/--/10	50	3P	Dyn11	4	Sol. 1	600	Sol. 1	Ak Ao-10%	1250	130	41	No	1600x1200x750	1250	Heavy	C4M	No	No
GST001/1041N	Italy	110050	100	KNAN	15	±2x2.5%	0,42	17.5/95/38	1.1/--/10	50	3P	Dyn11	4	Sol. 1	600	Sol. 1	Ak Ao-10%	1250	130	41	No	1600x1200x750	1250	Heavy	C4M	No	No
GST001/1042	Italy	110058	160	ONAN	15	±2x2.5%	0,42	17.5/95/38	1.1/--/10	50	3P	Dyn11	4	Sol. 1	600	Sol. 2	Ak Ao-10%	1750	189	44	Yes	1600x1350x750	1250	Heavy	C4M	No	No
GST001/1042N	Italy	110060	160	KNAN	15	±2x2.5%	0,42	17.5/95/38	1.1/--/10	50	3P	Dyn11	4	Sol. 1	600	Sol. 2	Ak Ao-10%	1750	189	44	Yes	1600x1350x750	1250	Heavy	C4M	No	No
GST001/1043	Italy	110059	160	ONAN	15	±2x2.5%	0,42	17.5/95/38	1.1/--/10	50	3P	Dyn11	4	Sol. 4	N/A	Sol. 2	Ak Ao-10%	1750	189	44	Yes	1600x1350x750	1250	Heavy	C4M	No	No
GST001/1044	Italy	110067	250	ONAN	15	±2x2.5%	0,42	17.5/95/38	1.1/--/10	50	3P	Dyn11	4	Sol. 4	N/A	Sol. 7	Ak Ao-10%	2350	270	47	Yes	1750x1400x800	2700	Heavy	C4M	No	No
GST001/1044N	Italy	110068	250	KNAN	15	±2x2.5%	0,42	17.5/95/38	1.1/--/10	50	3P	Dyn11	4	Sol. 4	N/A	Sol. 7	Ak Ao-10%	2350	270	47	Yes	1750x1400x800	2700	Heavy	C4M	No	No
GST001/1045	Italy	110079	400	ONAN	15	±2x2.5%	0,42	17.5/95/38	1.1/--/10	50	3P	Dyn11	4	Sol. 4	N/A	Sol. 7	Ak Ao-10%	3250	387	50	Yes	1850x1600x1030	2700	Heavy	C4M	No	No
GST001/1045N	Italy	110080	400	KNAN	15	±2x2.5%	0,42	17.5/95/38	1.1/--/10	50	3P	Dyn11	4	Sol. 4	N/A	Sol. 7	Ak Ao-10%	3250	387	50	Yes	1850x1600x1030	2700	Heavy	C4M	No	No
GST001/1046	Italy	110087	630	ONAN	15	±2x2.5%	0,42	17.5/95/38	1.1/--/10	50	3P	Dyn11	6	Sol. 4	N/A	Sol. 7	Ak Ao-10%	4600	540	52	Yes	1850x1800x1030	2700	Heavy	C4M	No	No

GST001/1046N	Italy	110088	630	KNAN	15	±2x2.5%	0,42	17.5/95/38	1.1/--/10	50	3P	Dyn11	6	Sol. 4	N/A	Sol. 7	Ak Ao-10%	4600	540	52	Yes	1850x1800x1030	2700	Heavy	C4M	No	No
GST001/1047	Italy	110047	50	ONAN	20	±2x2.5%	0,42	24/125/50	1.1/--/10	50	3P	Dyn11	4	Sol. 1	600	Sol. 1	Ak Ao-10%	750	81	39	No	1500x1200x750	1250	Heavy	C4M	No	No
GST001/1047N	Italy	110048	50	KNAN	20	±2x2.5%	0,42	24/125/50	1.1/--/10	50	3P	Dyn11	4	Sol. 1	600	Sol. 1	Ak Ao-10%	750	81	39	No	1500x1200x750	1250	Heavy	C4M	No	No
GST001/1048	Italy	110052	100	ONAN	20	±2x2.5%	0,42	24/125/50	1.1/--/10	50	3P	Dyn11	4	Sol. 1	600	Sol. 1	Ak Ao-10%	1250	130	41	No	1600x1200x750	1250	Heavy	C4M	No	No
GST001/1048N	Italy	110053	100	KNAN	20	±2x2.5%	0,42	24/125/50	1.1/--/10	50	3P	Dyn11	4	Sol. 1	600	Sol. 1	Ak Ao-10%	1250	130	41	No	1600x1200x750	1250	Heavy	C4M	No	No
GST001/1049	Italy	110061	160	ONAN	20	±2x2.5%	0,42	24/125/50	1.1/--/10	50	3P	Dyn11	4	Sol. 1	600	Sol. 2	Ak Ao-10%	1750	189	44	Yes	1600x1350x750	1250	Heavy	C4M	No	No
GST001/1049N	Italy	110063	160	KNAN	20	±2x2.5%	0,42	24/125/50	1.1/--/10	50	3P	Dyn11	4	Sol. 1	600	Sol. 2	Ak Ao-10%	1750	189	44	Yes	1600x1350x750	1250	Heavy	C4M	No	No
GST001/1050	Italy	110055	100	ONAN	20-10	±2x2.5%	0,42	24/125/50 12/75/28	1.1/--/10	50	3P	Dyn11	4	Sol. 1	600	Sol. 1	Ak+10% A0-10%+15%	1375	150	41	No	1600x1200x750	1250	Heavy	C4M	No	No
GST001/1051	Italy	110064	160	ONAN	20-10	±2x2.5%	0,42	24/125/50 12/75/28	1.1/--/10	50	3P	Dyn11	4	Sol. 1	600	Sol. 2	Ak+10% A0-10%+15%	1925	217	44	Yes	1600x1350x750	1250	Heavy	C4M	No	No
GST001/1053	Italy	110062	160	ONAN	20	±2x2.5%	0,42	24/125/50	1.1/--/10	50	3P	Dyn11	4	Sol. 4	N/A	Sol. 2	Ak Ao-10%	1750	189	44	Yes	1600x1350x750	1250	Heavy	C4M	No	No
GST001/1054	Italy	110065	160	ONAN	20-10	±2x2.5%	0,42	24/125/50 12/75/28	1.1/--/10	50	3P	Dyn11	4	Sol. 4	N/A	Sol. 2	Ak+10% A0-10%+15%	1925	217	44	Yes	1600x1350x750	1250	Heavy	C4M	No	No
GST001/1055	Italy	110069	250	ONAN	20	±2x2.5%	0,42	24/125/50	1.1/--/10	50	3P	Dyn11	4	Sol. 4	N/A	Sol. 7	Ak Ao-10%	2350	270	47	Yes	1750x1400x800	2700	Heavy	C4M	No	No
GST001/1055N	Italy	110070	250	KNAN	20	±2x2.5%	0,42	24/125/50	1.1/--/10	50	3P	Dyn11	4	Sol. 4	N/A	Sol. 7	Ak Ao-10%	2350	270	47	Yes	1750x1400x800	2700	Heavy	C4M	No	No
GST001/1056	Italy	110081	400	ONAN	20	±2x2.5%	0,42	24/125/50	1.1/--/10	50	3P	Dyn11	4	Sol. 4	N/A	Sol. 7	Ak Ao-10%	3250	387	50	Yes	1850x1600x1030	2700	Heavy	C4M	No	No
GST001/1056N	Italy	110082	400	KNAN	20	±2x2.5%	0,42	24/125/50	1.1/--/10	50	3P	Dyn11	4	Sol. 4	N/A	Sol. 7	Ak Ao-10%	3250	387	50	Yes	1850x1600x1030	2700	Heavy	C4M	No	No
GST001/1057	Italy	110089	630	ONAN	20	±2x2.5%	0,42	24/125/50	1.1/--/10	50	3P	Dyn11	6	Sol. 4	N/A	Sol. 7	Ak Ao-10%	4600	540	52	Yes	1850x1800x1030	2700	Heavy	C4M	No	No
GST001/1057N	Italy	110090	630	KNAN	20	±2x2.5%	0,42	24/125/50	1.1/--/10	50	3P	Dyn11	6	Sol. 4	N/A	Sol. 7	Ak Ao-10%	4600	540	52	Yes	1850x1800x1030	2700	Heavy	C4M	No	No
GST001/1058	Italy	110095	250	ONAN	20-10	±2x2.5%	0,42	24/125/50 12/75/28	1.1/--/10	50	3P	Dyn11	4	Sol. 4	N/A	Sol. 7	Ak+10% A0-10%+15%	2585	311	47	Yes	1750x1400x800	2700	Heavy	C4M	No	No

GST001/1059	Italy	110083	400	ONAN	20-10	±2x2.5%	0,42	24/125/50 12/75/28	1.1/--/10	50	3P	Dyn11	4	Sol. 4	N/A	Sol. 7	Ak+10% A0-10%+15%	3575	445	50	Yes	1850x1600x1030	2700	Heavy	C4M	No	No
GST001/1060	Italy	110091	630	ONAN	20-10	±2x2.5%	0,42	24/125/50 12/75/28	1.1/--/10	50	3P	Dyn11	6	Sol. 4	N/A	Sol. 7	Ak+10% A0-10%+15%	5060	621	52	Yes	1850x1800x1030	2700	Heavy	C4M	No	No
GST001/1061	Italy	110076	250	ONAN	22	±2x2.5%	0,42	24/125/50	1.1/--/10	50	3P	Dyn11	4	Sol. 4	N/A	Sol. 2	Ak Ao-10%	2350	270	47	Yes	1800x1400x800	2700	Heavy	C4M	No	No
GST001/1062	Italy	110084	400	ONAN	22	±2x2.5%	0,42	24/125/50	1.1/--/10	50	3P	Dyn11	4	Sol. 4	N/A	Sol. 3	Ak Ao-10%	3250	387	50	Yes	1800x1400x800	2700	Heavy	C4M	No	No
GST001/1063	Italy	110092	630	ONAN	22	±2x2.5%	0,42	24/125/50	1.1/--/10	50	3P	Dyn11	6	Sol. 4	N/A	Sol. 4	Ak Ao-10%	4600	540	52	Yes	1800x1400x800	2700	Heavy	C4M	No	No
GST001/1064	Italy	110077	250	ONAN	23	±2x2.5%	0,42	24/125/50	1.1/--/10	50	3P	Dyn11	4	Sol. 4	N/A	Sol. 2	Ak Ao-10%	2350	270	47	Yes	1750x1400x800	2700	Heavy	C4M	No	No
GST001/1065	Italy	110085	400	ONAN	23	±2x2.5%	0,42	24/125/50	1.1/--/10	50	3P	Dyn11	4	Sol. 4	N/A	Sol. 3	Ak Ao-10%	3250	387	50	Yes	1850x1600x930	2700	Heavy	C4M	No	No
GST001/1066	Italy	110093	630	ONAN	23	±2x2.5%	0,42	24/125/50	1.1/--/10	50	3P	Dyn11	6	Sol. 4	N/A	Sol. 4	Ak Ao-10%	4600	540	52	Yes	1850x1800x930	2700	Heavy	C4M	No	No
GST001/1067	Italy	110078	250	ONAN	9	±2x2.5%	0,42	12/75/28	1.1/--/10	50	3P	Dyn11	4	Sol. 4	N/A	Sol. 7	Ak Ao-10%	2350	270	47	Yes	1750x1400x800	2700	Heavy	C4M	No	No
GST001/1068	Italy	110086	400	ONAN	9	±2x2.5%	0,42	12/75/28	1.1/--/10	50	3P	Dyn11	4	Sol. 4	N/A	Sol. 7	Ak Ao-10%	3250	387	50	Yes	1850x1600x1030	2700	Heavy	C4M	No	No
GST001/1069	Italy	110094	630	ONAN	9	±2x2.5%	0,42	12/75/28	1.1/--/10	50	3P	Dyn11	6	Sol. 4	N/A	Sol. 7	Ak Ao-10%	4600	540	52	Yes	1850x1800x1030	2700	Heavy	C4M	No	No
GST001/1070	Italy	110051	100	ONAN	15	±2x2.5%	0,42	17.5/95/38	1.1/--/10	50	3P	Dyn11	4	Sol. 4	N/A	Sol. 1	Ak Ao-10%	1250	130	41	No	1600x1200x750	1250	Heavy	C4M	No	No
GST001/1071	Italy	110054	100	ONAN	20	±2x2.5%	0,42	24/125/50	1.1/--/10	50	3P	Dyn11	4	Sol. 4	N/A	Sol. 1	Ak Ao-10%	1250	130	41	No	1600x1200x750	1250	Heavy	C4M	No	No
GST001/1072	Italy	110057	100	ONAN	20-10	±2x2.5%	0,42	24/125/50 12/75/28	1.1/--/10	50	3P	Dyn11	4	Sol. 4	N/A	Sol. 1	Ak+10% A0-10%+15%	1375	150	41	No	1600x1200x750	1250	Heavy	C4M	No	No
GST001/1073	Italy	110056	100	ONAN	23	±2x2.5%	0,42	24/125/50	1.1/--/10	50	3P	Dyn11	4	Sol. 1	600	Sol. 1	Ak Ao-10%	1250	130	41	No	1600x1200x750	1250	Heavy	C4M	No	No
GST001/1074	Italy	110066	160	ONAN	23	±2x2.5%	0,42	24/125/50	1.1/--/10	50	3P	Dyn11	4	Sol. 1	600	Sol. 2	Ak Ao-10%	1750	189	44	Yes	1600x1350x750	1250	Heavy	C4M	No	No
GST001/1075	Italy	110071	160	ONAN	20-8,4	20 (±2x2.5%) 8,4 (±2x3%)	0,420-0,242	24/125/50 12/75/28	1.1/--/10	50	3P	Dyn11	4 (20 kV) 4,5 (8,4 kV)	Sol. 1	600	Sol. 2	Ak+20% A0-10%+20%	2100	227	44	Yes	1600x1350x750	1250	Heavy	C4M	No	No

GST001/1076	Italy	110072	160	ONAN	20-8,4	20 (±2x2.5%) 8,4 (±2x3%)	0,420-0,242	24/125/50 12/75/28	1.1/--/10	50	3P	Dyn11	4 (20 kV) 4,5 (8,4 kV)	Sol. 4	N/A	Sol. 2	Ak+20% A0-10%+20%	2100	227	44	Yes	1600x1350x750	1250	Heavy	C4M	No	No
GST001/1077	Italy	110073	250	ONAN	20-8,4	20 (±2x2.5%) 8,4 (±2x3%)	0,420-0,242	24/125/50 12/75/28	1.1/--/10	50	3P	Dyn11	4 (20 kV) 4,5 (8,4 kV)	Sol. 4	N/A	Sol. 7	Ak+20% A0-10%+20%	2820	324	47	Yes	1750x1400x800	2700	Heavy	C4M	No	No
GST001/1078	Italy	110074	400	ONAN	20-8,4	20 (±2x2.5%) 8,4 (±2x3%)	0,420-0,242	24/125/50 12/75/28	1.1/--/10	50	3P	Dyn11	4 (20 kV) 4,5 (8,4 kV)	Sol. 4	N/A	Sol. 7	Ak+20% A0-10%+20%	3900	464	50	Yes	1850x1600x1030	2700	Heavy	C4M	No	No
GST001/1079	Italy	110075	630	ONAN	20-8,4	20 (±2x2.5%) 8,4 (±2x3%)	0,420-0,242	24/125/50 12/75/28	1.1/--/10	50	3P	Dyn11	6 (20 kV) 6,2 (8,4 kV)	Sol. 4	N/A	Sol. 7	Ak+20% A0-10%+20%	5520	648	52	Yes	1850x1800x1030	2700	Heavy	C4M	No	No
GST001/1080	Italy	in progress	250	ONAN	27	±2x2.5%	0,42	36/170/70	1.1/--/10	50	3P	Dyn11	4	TBD	N/A	Sol. 7	Ak+10% Ao-10%+15%	2585	311	51	Yes	1750x1400x800	2700	Heavy	C4M	No	No
GST001/1081	Italy	in progress	400	ONAN	27	±2x2.5%	0,42	36/170/70	1.1/--/10	50	3P	Dyn11	4	TBD	N/A	Sol. 7	Ak+10% Ao-10%+15%	3575	445	54	Yes	1850x1600x1030	2700	Heavy	C4M	No	No
GST001/1082	Italy	in progress	630	ONAN	27	±2x2.5%	0,42	36/170/70	1.1/--/10	50	3P	Dyn11	6	TBD	N/A	Sol. 7	Ak+10% Ao-10%+15%	5060	621	56	Yes	1850x1800x1030	2700	Heavy	C4M	No	No
GST001/1083	Italy	110113	100/50/50	ONAN	15	±2x2.5%	0,90 (BT1) 0,42 (BT2)	17.5/95/38	1.1/--/10	50	3P	D,yn11,yn11	4 (AT/BT1) 4 (AT/BT2)	Sol. 1	600	Sol. 1	Ak(+10%) A0-10%(+15%)	1375	149,50	41	No	1500x1200x750	1250	Heavy	C4M	No	No
GST001/1084	Italy	110112	160/50/110	ONAN	15	±2x2.5%	0,90 (BT1) 0,42 (BT2)	17.5/95/38	1.1/--/10	50	3P	D,yn11,yn11	4 (AT/BT1) 4 (AT/BT2)	Sol. 1	600	Sol. 1	Ak(+10%) A0-10%(+15%)	1925	217,35	44	Yes	1600x1350x750	1250	Heavy	C4M	No	No
GST001/1085	Italy	110111	160/110/50	ONAN	15	±2x2.5%	0,90 (BT1) 0,42 (BT2)	17.5/95/38	1.1/--/10	50	3P	D,yn11,yn11	4 (AT/BT1) 4 (AT/BT2)	Sol. 1	600	Sol. 1	Ak(+10%) A0-10%(+15%)	1925	217,35	44	Yes	1600x1350x750	1250	Heavy	C4M	No	No
GST001/1086	Italy	110110	160/50/110	ONAN	15	±2x2.5%	0,90 (BT1) 0,42 (BT2)	17.5/95/38	1.1/--/10	50	3P	D,yn11,yn11	4 (AT/BT1) 4 (AT/BT2)	Sol. 4	N/A	Sol. 1	Ak(+10%) A0-10%(+15%)	1925	217,35	44	Yes	1600x1350x750	1250	Heavy	C4M	No	No
GST001/1087	Italy	110109	250/100/150	ONAN	15	±2x2.5%	0,90 (BT1) 0,42 (BT2)	17.5/95/38	1.1/--/10	50	3P	D,yn11,yn11	4 (AT/BT1) 4 (AT/BT2)	Sol. 4	N/A	Sol. 1 o 2 (BT1) Sol. 2 (BT2)	Ak(+10%) A0-10%(+15%)	2585	310,50	47	Yes	1750x1400x800	2700	Heavy	C4M	No	No
GST001/1088	Italy	110108	100/50/50	ONAN	20	±2x2.5%	0,90 (BT1) 0,42 (BT2)	24/125/50	1.1/--/10	50	3P	D,yn11,yn11	4 (AT/BT1) 4 (AT/BT2)	Sol. 1	600	Sol. 1	Ak(+10%) A0-10%(+15%)	1375	149,50	41	No	1500x1200x750	1250	Heavy	C4M	No	No
GST001/1089	Italy	110107	160/50/110	ONAN	20	±2x2.5%	0,90 (BT1) 0,42 (BT2)	24/125/50	1.1/--/10	50	3P	D,yn11,yn11	4 (AT/BT1) 4 (AT/BT2)	Sol. 1	600	Sol. 1	Ak(+10%) A0-10%(+15%)	1925	217,35	44	Yes	1600x1350x750	1250	Heavy	C4M	No	No
GST001/1090	Italy	110105	160/110/50	ONAN	20	±2x2.5%	0,90 (BT1) 0,42 (BT2)	24/125/50	1.1/--/10	50	3P	D,yn11,yn11	4 (AT/BT1) 4 (AT/BT2)	Sol. 1	600	Sol. 1	Ak(+10%) A0-10%(+15%)	1925	217,35	44	Yes	1600x1350x750	1250	Heavy	C4M	No	No
GST001/1091	Italy	110106	160/50/110	ONAN	20	±2x2.5%	0,90 (BT1) 0,42 (BT2)	24/125/50	1.1/--/10	50	3P	D,yn11,yn11	4 (AT/BT1) 4 (AT/BT2)	Sol. 4	N/A	Sol. 1	Ak(+10%) A0-10%(+15%)	1925	217,35	44	Yes	1600x1350x750	1250	Heavy	C4M	No	No

GST001/1092	Italy	110098	250/100/150	ONAN	20	±2x2.5%	0,90 (BT1) 0,42 (BT2)	24/125/50	1.1/--/10	50	3P	D,yn11,yn11	4 (AT/BT1) 4 (AT/BT2)	Sol. 4	N/A	Sol. 1 o 2 (BT1) Sol. 2 (BT2)	Ak(+10%) A0-10%(+15%)	2585	310,50	47	Yes	1750x1400x800	2700	Heavy	C4M	No	No
GST001/1093	Italy	110104	50	ONAN	15	±2x2.5%	0,90	17.5/95/38	1.1/--/10	50	3P	Dyn11	4	Sol. 1	600	Sol. 1	Ak Ao-10%	750	81	39	No	1500x1200x750	1250	Heavy	C4M	No	No
GST001/1094	Italy	110103	50	ONAN	20	±2x2.5%	0,90	24/125/50	1.1/--/10	50	3P	Dyn11	4	Sol. 1	600	Sol. 1	Ak Ao-10%	750	81	39	No	1500x1200x750	1250	Heavy	C4M	No	No
GST001/1095	Italy	110102	25	ONAN	0,90	±2x2.5%	0,42	1.1/--/10	1.1/--/10	50	3P	Yn,zn11	2	Sol. 1 (BT Bushing - ref. GS p. 6.5.2)	N/A	Sol. 1	Ak Ao-10%	600	63	37	No	1500x1200x750	1250	Heavy	C4M	No	No
GST001/1096	Italy	110101	50	ONAN	0,90	±2x2.5%	0,42	1.1/--/10	1.1/--/10	50	3P	Yn,zn11	2	Sol. 1 (BT Bushing - ref. GS p. 6.5.2)	N/A	Sol. 1	Ak Ao-10%	750	81	39	No	1500x1200x750	1250	Heavy	C4M	No	No
GST001/1097	Italy	110100	100	ONAN	0,90	±2x2.5%	0,42	1.1/--/10	1.1/--/10	50	3P	Yn,zn11	2	Sol. 1 (BT Bushing - ref. GS p. 6.5.2)	N/A	Sol. 1	Ak Ao-10%	1250	130	41	No	1500x1200x750	1250	Heavy	C4M	No	No
GST001/1098	Italy	110099	50	ONAN	0,42	±2x2.5%	0,90	1.1/--/10	1.1/--/10	50	3P	Yn,yn0	2	Sol. 1 (BT Bushing - ref. GS p. 6.5.2)	N/A	Sol. 1	Ak Ao-10%	750	81	39	No	1500x1200x750	1250	Heavy	C4M	No	No
GST001/1119	Romania	110047	50	ONAN	20	±2x2.5%	0,42	24/125/50	1.1/--/10	50	3P	Dyn11	4	Sol. 1	600	Sol. 1	Ak Ao-10%	750	81	39	No	1500x1200x750	1250	Heavy	C4M	No	No
GST001/1119N	Romania	110048	50	KNAN	20	±2x2.5%	0,42	24/125/50	1.1/--/10	50	3P	Dyn11	4	Sol. 1	600	Sol. 1	Ak Ao-10%	750	81	39	No	1500x1200x750	1250	Heavy	C4M	No	No
GST001/1120	Romania	110049	100	ONAN	20	±2x2.5%	0,42	24/125/50	1.1/--/10	50	3P	Dyn11	4	Sol. 1	600	Sol. 1	Ak Ao-10%	1250	130	41	No	1600x1200x750	1250	Heavy	C4M	No	No
GST001/1120N	Romania	110050	100	KNAN	20	±2x2.5%	0,42	24/125/50	1.1/--/10	50	3P	Dyn11	4	Sol. 1	600	Sol. 1	Ak Ao-10%	1250	130	41	No	1600x1200x750	1250	Heavy	C4M	No	No
GST001/1121	Romania	110051	160	ONAN	20	±2x2.5%	0,42	24/125/50	1.1/--/10	50	3P	Dyn11	4	Sol. 1	600	Sol. 2	Ak Ao-10%	1750	189	44	Yes	1600x1350x750	1250	Heavy	C4M	No	No
GST001/1121N	Romania	110052	160	KNAN	20	±2x2.5%	0,42	24/125/50	1.1/--/10	50	3P	Dyn11	4	Sol. 1	600	Sol. 2	Ak Ao-10%	1750	189	44	Yes	1600x1350x750	1250	Heavy	C4M	No	No
GST001/1122	Romania	110053	250	ONAN	20	±2x2.5%	0,42	24/125/50	1.1/--/10	50	3P	Dyn11	4	Sol. 1	600	Sol. 2	Ak Ao-10%	2350	270	47	Yes	1750x1400x800	2700	Heavy	C4M	No	No
GST001/1122N	Romania	110055	250	KNAN	20	±2x2.5%	0,42	24/125/50	1.1/--/10	50	3P	Dyn11	4	Sol. 1	600	Sol. 2	Ak Ao-10%	2350	270	47	Yes	1750x1400x800	2700	Heavy	C4M	No	No
GST001/1123	Romania	110056	100	ONAN	20-10	±2x2.5%	0,42	24/125/50 12/75/28	1.1/--/10	50	3P	Dyn11	4	Sol. 1	600	Sol. 1	Ak+10% A0-10%+15%	1375	150	41	No	1600x1200x750	1250	Heavy	C4M	No	No

GST001/1123N	Romania	110073	100	KNAN	20-10	±2x2.5%	0,42	24/125/50 12/75/28	1.1/--/10	50	3P	Dyn11	4	Sol. 1	600	Sol. 1	Ak+10% A0-10%+15%	1375	150	41	No	1600x1200x750	1250	Heavy	C4M	No	No
GST001/1124	Romania	110057	160	ONAN	20-10	±2x2.5%	0,42	24/125/50 12/75/28	1.1/--/10	50	3P	Dyn11	4	Sol. 1	600	Sol. 2	Ak+10% A0-10%+15%	1925	217,35	44	Yes	1600x1350x750	1250	Heavy	C4M	No	No
GST001/1124N	Romania	110074	160	KNAN	20-10	±2x2.5%	0,42	24/125/50 12/75/28	1.1/--/10	50	3P	Dyn11	4	Sol. 1	600	Sol. 2	Ak+10% A0-10%+15%	1925	217,35	44	Yes	1600x1350x750	1250	Heavy	C4M	No	No
GST001/1125	Romania	110058	160	ONAN	20	±2x2.5%	0,42	24/125/50	1.1/--/10	50	3P	Dyn11	4	Sol. 4	N/A	Sol. 2	Ak Ao-10%	1750	189	44	Yes	1600x1350x750	1250	Heavy	C4M	No	No
GST001/1125N	Romania	110075	160	KNAN	20	±2x2.5%	0,42	24/125/50	1.1/--/10	50	3P	Dyn11	4	Sol. 4	N/A	Sol. 2	Ak Ao-10%	1750	189	44	Yes	1600x1350x750	1250	Heavy	C4M	No	No
GST001/1126	Romania	110059	160	ONAN	20-10	±2x2.5%	0,42	24/125/50 12/75/28	1.1/--/10	50	3P	Dyn11	4	Sol. 4	N/A	Sol. 2	Ak+10% A0-10%+15%	1925	217,35	44	Yes	1600x1350x750	1250	Heavy	C4M	No	No
GST001/1126N	Romania	110076	160	KNAN	20-10	±2x2.5%	0,42	24/125/50 12/75/28	1.1/--/10	50	3P	Dyn11	4	Sol. 4	N/A	Sol. 2	Ak+10% A0-10%+15%	1925	217,35	44	Yes	1600x1350x750	1250	Heavy	C4M	No	No
GST001/1127	Romania	110060	250	ONAN	20	±2x2.5%	0,42	24/125/50	1.1/--/10	50	3P	Dyn11	4	Sol. 4	N/A	Sol. 7	Ak Ao-10%	2350	270	47	Yes	1750x1400x800	2700	Heavy	C4M	No	No
GST001/1127N	Romania	110077	250	KNAN	20	±2x2.5%	0,42	24/125/50	1.1/--/10	50	3P	Dyn11	4	Sol. 4	N/A	Sol. 7	Ak Ao-10%	2350	270	47	Yes	1750x1400x800	2700	Heavy	C4M	No	No
GST001/1128	Romania	110061	400	ONAN	20	±2x2.5%	0,42	24/125/50	1.1/--/10	50	3P	Dyn11	4	Sol. 4	N/A	Sol. 7	Ak Ao-10%	3250	387	50	Yes	1850x1600x1030	2700	Heavy	C4M	No	No
GST001/1128N	Romania	110078	400	KNAN	20	±2x2.5%	0,42	24/125/50	1.1/--/10	50	3P	Dyn11	4	Sol. 4	N/A	Sol. 7	Ak Ao-10%	3250	387	50	Yes	1850x1600x1030	2700	Heavy	C4M	No	No
GST001/1128S	Romania	110062	400	KNAN	20	±2x2.5%	0,42	24/125/50	1.1/--/10	50	3P	Dyn11	4	Sol. 4	N/A	Sol. 7	Ak Ao-10%	3250	387	50	Yes	1850x1600x1030	2700	Heavy	C4M	No	No
GST001/1129	Romania	110063	630	ONAN	20	±2x2.5%	0,42	24/125/50	1.1/--/10	50	3P	Dyn11	6	Sol. 4	N/A	Sol. 7	Ak Ao-10%	4600	540	52	Yes	1850x1800x1030	2700	Heavy	C4M	No	No
GST001/1129N	Romania	110079	630	KNAN	20	±2x2.5%	0,42	24/125/50	1.1/--/10	50	3P	Dyn11	6	Sol. 4	N/A	Sol. 7	Ak Ao-10%	4600	540	52	Yes	1850x1800x1030	2700	Heavy	C4M	No	No
GST001/1129S	Romania	110054	630	KNAN	20	±2x2.5%	0,42	24/125/50	1.1/--/10	50	3P	Dyn11	6	Sol. 4	N/A	Sol. 7	Ak Ao-10%	4600	540	52	Yes	1850x1800x1030	2700	Heavy	C4M	No	No
GST001/1130	Romania	110072	250	ONAN	20-10	±2x2.5%	0,42	24/125/50 12/75/28	1.1/--/10	50	3P	Dyn11	4	Sol. 4	N/A	Sol. 7	Ak+10% A0-10%+15%	2585	310,5	47	Yes	1750x1400x800	2700	Heavy	C4M	No	No
GST001/1130N	Romania	110080	250	KNAN	20-10	±2x2.5%	0,42	24/125/50 12/75/28	1.1/--/10	50	3P	Dyn11	4	Sol. 4	N/A	Sol. 7	Ak+10% A0-10%+15%	2585	310,5	47	Yes	1750x1400x800	2700	Heavy	C4M	No	No
GST001/1131	Romania	110064	400	ONAN	20-10	±2x2.5%	0,42	24/125/50 12/75/28	1.1/--/10	50	3P	Dyn11	4	Sol. 4	N/A	Sol. 7	Ak+10% A0-10%+15%	3575	445,05	50	Yes	1850x1600x1030	2700	Heavy	C4M	No	No

GST001/1131N	Romania	110081	400	KNAN	20-10	±2x2.5%	0,42	24/125/50 12/75/28	1.1/--/10	50	3P	Dyn11	4	Sol. 4	N/A	Sol. 7	Ak+10% A0-10%+15%	3575	445,05	50	Yes	1850x1600x1030	2700	Heavy	C4M	No	No
GST001/1131S	Romania	110065	400	KNAN	20-10	±2x2.5%	0,42	24/125/50 12/75/28	1.1/--/10	50	3P	Dyn11	4	Sol. 4	N/A	Sol. 7	Ak+10% A0-10%+15%	3575	445,05	50	Yes	1850x1600x1030	2700	Heavy	C4M	No	No
GST001/1132	Romania	110066	630	ONAN	20-10	±2x2.5%	0,42	24/125/50 12/75/28	1.1/--/10	50	3P	Dyn11	6	Sol. 4	N/A	Sol. 7	Ak+10% A0-10%+15%	5060	621	52	Yes	1850x1800x1030	2700	Heavy	C4M	No	No
GST001/1132N	Romania	110082	630	KNAN	20-10	±2x2.5%	0,42	24/125/50 12/75/28	1.1/--/10	50	3P	Dyn11	6	Sol. 4	N/A	Sol. 7	Ak+10% A0-10%+15%	5060	621	52	Yes	1850x1800x1030	2700	Heavy	C4M	No	No
GST001/1132S	Romania	110067	630	KNAN	20-10	±2x2.5%	0,42	24/125/50 12/75/28	1.1/--/10	50	3P	Dyn11	6	Sol. 4	N/A	Sol. 7	Ak+10% A0-10%+15%	5060	621	52	Yes	1850x1800x1030	2700	Heavy	C4M	No	No
GST001/1133	Romania	110068	800	ONAN	20	±2x2.5%	0,42	24/125/50	1.1/--/10	50	3P	Dyn11	6	Sol. 4	N/A	Sol. 7	Ak Ao-10%	6000	585	53	Yes	1950x1850x1000	no specific limits	Heavy	C4M	No	No
GST001/1134	Romania	110069	800	ONAN	20-10	±2x2.5%	0,42	24/125/50 12/75/28	1.1/--/10	50	3P	Dyn11	6	Sol. 4	N/A	Sol. 7	Ak+10% A0-10%+15%	6600	673	53	Yes	1950x1850x1000	no specific limits	Heavy	C4M	No	No
GST001/1135	Romania	110070	1000	ONAN	20	±2x2.5%	0,42	24/125/50	1.1/--/10	50	3P	Dyn11	6	Sol. 4	N/A	Sol. 7	Ak Ao-10%	7600	693	55	Yes	2080x1990x1190	no specific limits	Heavy	C4M	No	No
GST001/1136	Romania	110071	1000	ONAN	20-10	±2x2.5%	0,42	24/125/50 12/75/28	1.1/--/10	50	3P	Dyn11	6	Sol. 4	N/A	Sol. 7	Ak+10% A0-10%+15%	8360	796,95	55	Yes	2080x1990x1190	no specific limits	Heavy	C4M	No	No
GST001/1140	Romania	110106	50	ONAN	20	±2x2.5%	1	24/125/50	1.1/--/10	50	3P	Dyn11	4	Sol. 1	600	Sol. 1	Ak Ao-10%	750	81	39	No	1500x1200x750	≤ 1250	Heavy	C4M	No	No
GST001/1140N	Romania	110089	50	KNAN	20	±2x2.5%	1	24/125/50	1.1/--/10	50	3P	Dyn11	4	Sol. 1	600	Sol. 1	Ak Ao-10%	750	81	39	No	1500x1200x750	≤ 1250	Heavy	C4M	No	No
GST001/1141	Romania	110088	50	ONAN	1	±2x2.5%	0,42	1.1/--/10	1.1/--/10	50	3P	Dyn11	4	Sol. 1 (BT Bushing - ref. GS p. 6.5.2)	N/A	Sol. 1	Ak Ao-10%	750	81	39	No	1500x1200x750	≤ 1250	Heavy	C4M	No	No
GST001/1141N	Romania	110090	50	KNAN	1	±2x2.5%	0,42	1.1/--/10	1.1/--/10	50	3P	Dyn11	4	Sol. 1 (BT Bushing - ref. GS p. 6.5.2)	N/A	Sol. 1	Ak Ao-10%	750	81	39	No	1500x1200x750	≤ 1250	Heavy	C4M	No	No
GST001/1142	Romania	110107	250	ONAN	6	±2x2.5%	0,42	7,2/60/20	1.1/--/10	50	3P	Dyn11	4	Sol. 1	600	Sol. 1	Ak Ao-10%	2350	270	47	Yes	1750x1400x800	≤ 2700	Heavy	C4M	No	No
GST001/1142N	Romania	110091	250	KNAN	6	±2x2.5%	0,42	7,2/60/20	1.1/--/10	50	3P	Dyn11	4	Sol. 1	600	Sol. 1	Ak Ao-10%	2350	270	47	Yes	1750x1400x800	≤ 2700	Heavy	C4M	No	No
GST001/1143	Romania	110092	400	ONAN	20	±2x2.5%	0,42	24/125/50	1.1/--/10	50	3P	Dyn11	4	Sol. 1	600	Sol.1	Ak Ao-10%	3250	387	50	Yes	1850x1600x1030	≤ 2700	Heavy	C4M	No	No

GST001/1143S	Romania	110093	400	KNAN	20	±2x2.5%	0,42	24/125/50	1.1/--/10	50	3P	Dyn11	4	Sol. 1	600	Sol.1	Ak Ao-10%	3250	387	50	Yes	1850x1600x1030	≤ 2700	Heavy	C4M	No	No
GST001/1144	Romania	110095	630	ONAN	6	±2x2.5%	0,42	7,2/60/20	1.1/--/10	50	3P	Dyn11	6	Sol. 4	N/A	Sol. 1	Ak Ao-10%	4600	540	52	Yes	1850x1800x1030	≤ 2700	Heavy	C4M	No	No
GST001/1144S	Romania	110094	630	KNAN	6	±2x2.5%	0,42	7,2/60/20	1.1/--/10	50	3P	Dyn11	6	Sol. 4	N/A	Sol. 1	Ak Ao-10%	4600	540	52	Yes	1850x1800x1030	≤ 2700	Heavy	C4M	No	No
GST001/1145	Romania	110096	630	ONAN	10	±2x2.5%	0,42	12/75/28	1.1/--/10	50	3P	Dyn11	6	Sol. 1	600	Sol. 1	Ak Ao-10%	4600	540	52	Yes	1850x1800x1030	≤ 2700	Heavy	C4M	No	No
GST001/1145S	Romania	110097	630	KNAN	10	±2x2.5%	0,42	12/75/28	1.1/--/10	50	3P	Dyn11	6	Sol. 1	600	Sol. 1	Ak Ao-10%	4600	540	52	Yes	1850x1800x1030	≤ 2700	Heavy	C4M	No	No
GST001/1146	Romania	110098	1000	ONAN	20	±2x2.5%	6	24/125/50	7,2/60/20	50	3P	Dyn11	6	Sol. 1	600	Sol. 1 MV bushing type (ref. GS p. 6.5.1)	Ak Ao-10%	7600	693	55	Yes	2080x1990x1190	no specific limits	Heavy	C4M	No	No
GST001/1146N	Romania	110099	1000	KNAN	20	±2x2.5%	6	24/125/50	7,2/60/20	50	3P	Dyn11	6	Sol. 1	600	Sol. 1 MV bushing type (ref. GS p. 6.5.1)	Ak Ao-10%	7600	693	55	Yes	2080x1990x1190	no specific limits	Heavy	C4M	No	No
GST001/1147	Romania	110100	1250	ONAN	20	±2x2.5%	0,42	24/125/50	1.1/--/10	50	3P	Dyn11	6	Sol. 1	600	Sol. 1	Ak Ao-10%	9500	855	56	Yes	2000x1800x1100	no specific limits	Heavy	C4M	No	No
GST001/1147N	Romania	110101	1250	KNAN	20	±2x2.5%	0,42	24/125/50	1.1/--/10	50	3P	Dyn11	6	Sol. 1	600	Sol. 1	Ak Ao-10%	9500	855	56	Yes	2000x1800x1100	no specific limits	Heavy	C4M	No	No
GST001/1148	Romania	110102	1600	ONAN	20	±2x2.5%	0,42	24/125/50	1.1/--/10	50	3P	Dyn11	6	Sol. 1	600	Sol. 1	Ak Ao-10%	12000	1080	58	Yes	2080x2040x1230	no specific limits	Heavy	C4M	No	No
GST001/1148N	Romania	110104	1600	KNAN	20	±2x2.5%	0,42	24/125/50	1.1/--/10	50	3P	Dyn11	6	Sol. 1	600	Sol. 1	Ak Ao-10%	12000	1080	58	Yes	2080x2040x1230	no specific limits	Heavy	C4M	No	No
GST001/1149	Romania	110103	1600	ONAN	20	±2x2.5%	6	24/125/50	7,2/60/20	50	3P	Dyn11	6	Sol. 1	600	Sol. 1 MV bushing type (ref. GS p. 6.5.1)	Ak Ao-10%	12000	1080	58	Yes	2080x2040x1230	no specific limits	Heavy	C4M	No	No
GST001/1149N	Romania	110105	1600	KNAN	20	±2x2.5%	6	24/125/50	7,2/60/20	50	3P	Dyn11	6	Sol. 1	600	Sol. 1 MV bushing type (ref.	Ak Ao-10%	12000	1080	58	Yes	2080x2040x1230	no specific limits	Heavy	C4M	No	No

																GS p. 6.5.1)											
GST001/1150	Romania	in progress	400	ONAN	6	±2x2.5%	0,42	7,2/60/20	1.1/--/10	50	3P	Dyn11	4	Sol.4	N/A	Sol.1	Ak Ao-10%	3250	387	50	Yes	1850x1600x1030	≤ 2700	Heavy	C4M	No	No
GST001/1150S	Romania	in progress	400	KNAN	6	±2x2.5%	0,42	7,2/60/20	1.1/--/10	50	3P	Dyn11	4	Sol.4	N/A	Sol.1	Ak Ao-10%	3250	387	50	Yes	1850x1600x1030	≤ 2700	Heavy	C4M	No	No
GST001/1151	Romania	in progress	400	ONAN	6	±2x2.5%	0,42	7,2/60/20	1.1/--/10	50	3P	Dyn11	4	Sol. 1	600	Sol.1	Ak Ao-10%	3250	387	50	Yes	1850x1600x1030	≤ 2700	Heavy	C4M	No	No
GST001/1151S	Romania	in progress	400	KNAN	6	±2x2.5%	0,42	7,2/60/20	1.1/--/10	50	3P	Dyn11	4	Sol. 1	600	Sol.1	Ak Ao-10%	3250	387	50	Yes	1850x1600x1030	≤ 2700	Heavy	C4M	No	
GST001/1152	Romania	in progress	160	ONAN	6	±2x2.5%	0,42	7,2/60/20	1.1/--/10	50	3P	Dyn11	4	Sol. 1	600	Sol. 1	Ak Ao-10%	1750	189	44	No	1600x1350x750	≤ 1250	Heavy	C4M	No	No
GST001/1152N	Romania	in progress	160	KNAN	6	±2x2.5%	0,42	7,2/60/20	1.1/--/10	50	3P	Dyn11	4	Sol. 1	600	Sol. 1	Ak Ao-10%	1750	189	44	No	1600x1350x750	≤ 1250	Heavy	C4M	No	No
GST001/1153	Romania	in progress	100	ONAN	6	±2x2.5%	0,42	7,2/60/20	1.1/--/10	50	3P	Dyn11	4	Sol. 1	600	Sol. 1	Ak Ao-10%	1250	130	41	No	1600x1200x750	≤ 2700	Heavy	C4M	No	No
GST001/1153N	Romania	in progress	100	KNAN	6	±2x2.5%	0,42	7,2/60/20	1.1/--/10	50	3P	Dyn11	4	Sol. 1	600	Sol. 1	Ak Ao-10%	1250	130	41	No	1600x1200x750	≤ 2700	Heavy	C4M	No	No
GST001/1154	Romania	in progress	100	ONAN	20	±2x2.5%	1	24/125/50	1.1/--/10	50	3P	Dyn11	4	Sol. 1	600	Sol. 1	Ak Ao-10%	1250	130	41	No	1500x1200x750	≤ 1250	Heavy	C4M	No	No
GST001/1154N	Romania	in progress	100	KNAN	20	±2x2.5%	1	24/125/50	1.1/--/10	50	3P	Dyn11	4	Sol. 1	600	Sol. 1	Ak Ao-10%	1250	130	41	No	1500x1200x750	≤ 1250	Heavy	C4M	No	No
GST001/1155	Romania	in progress	25	ONAN	1	±2x2.5%	0,42	1.1/--/10	1.1/--/10	50	3P	Dyn11	4	Sol. 1	600	Sol. 1	Ak Ao-10%	600	63	37	No	1350x1120x710	≤ 1250	Heavy	C4M	No	No
GST001/1156	Romania	in progress	400	ONAN	10	±2x2.5%	0,42	12/75/28	1.1/--/10	50	3P	Dyn11	4	Sol. 1	600	Sol.1	Ak Ao-10%	3250	387	50	Yes	1850x1600x1030	≤ 2700	Heavy	C4M	No	No
GST001/1156S	Romania	in progress	400	KNAN	10	±2x2.5%	0,42	12/75/28	1.1/--/10	50	3P	Dyn11	4	Sol. 1	600	Sol.1	Ak Ao-10%	3250	387	50	Yes	1850x1600x1030	≤ 2700	Heavy	C4M	No	No
GST001/1157	Romania	in progress	250	ONAN	10	±2x2.5%	0,42	12/75/28	1.1/--/10	50	3P	Dyn11	4	Sol. 1	600	Sol. 1	Ak Ao-10%	2350	270	47	Yes	1750x1400x800	≤ 2700	Heavy	C4M	No	No
GST001/1157N	Romania	in progress	250	KNAN	10	±2x2.5%	0,42	12/75/28	1.1/--/10	50	3P	Dyn11	4	Sol. 1	600	Sol. 1	Ak Ao-10%	2350	270	47	Yes	1750x1400x800	≤ 2700	Heavy	C4M	No	No
GST001/1158	Romania	in progress	50	ONAN	6	±2x2.5%	0,42	7,2/60/20	1.1/--/10	50	3P	Dyn11	4	Sol. 1	600	Sol. 1	Ak Ao-10%	750	81	39	No	1500x1200x750	≤ 1250	Heavy	C4M	No	No
GST001/1158N	Romania	in progress	50	KNAN	6	±2x2.5%	0,42	7,2/60/20	1.1/--/10	50	3P	Dyn11	4	Sol. 1	600	Sol. 1	Ak Ao-10%	750	81	39	No	1500x1200x750	≤ 1250	Heavy	C4M	No	No

GST001/1159	Romania	in progress	630	ONAN	6	±2x2.5%	0,42	7,2/60/20	1.1/--/10	50	3P	Dyn11	6	Sol. 4	N/A	Sol. 1	Ak Ao-10%	4600	540	52	Yes	1850x1600x1030	≤ 2700	Heavy	C4M	No	No
GST001/1159S	Romania	in progress	630	KNAN	6	±2x2.5%	0,42	7,2/60/20	1.1/--/10	50	3P	Dyn11	6	Sol. 4	N/A	Sol. 1	Ak Ao-10%	4600	540	52	Yes	1850x1600x1030	≤ 2700	Heavy	C4M	No	No
GST001/1160	Romania	in progress	1000	ONAN	6	±2x2.5%	0,42	7,2/60/20	1.1/--/10	50	3P	Dyn11	6	Sol. 1	600	Sol. 1	Ak Ao-10%	7600	693	55	Yes	2080x1990x1190	no specific limits	Heavy	C4M	No	No
GST001/1160N	Romania	in progress	1000	KNAN	6	±2x2.5%	0,42	7,2/60/20	1.1/--/10	50	3P	Dyn11	6	Sol. 1	600	Sol. 1	Ak Ao-10%	7600	693	55	Yes	2080x1990x1190	no specific limits	Heavy	C4M	No	No
GST001/1161	Romania	in progress	1600	ONAN	6	±2x2.5%	0,42	7,2/60/20	1.1/--/10	50	3P	Dyn11	6	Sol. 1	600	Sol. 1	Ak Ao-10%	12000	1080	58	Yes	2080x2040x1230	no specific limits	Heavy	C4M	No	No
GST001/1161N	Romania	in progress	1600	KNAN	6	±2x2.5%	0,42	7,2/60/20	1.1/--/10	50	3P	Dyn11	6	Sol. 1	600	Sol. 1	Ak Ao-10%	12000	1080	58	Yes	2080x2040x1230	no specific limits	Heavy	C4M	No	No
GST001/1162	Romania	in progress	100	ONAN	10	±2x2.5%	0,42	12/75/28	1.1/--/10	50	3P	Dyn11	4	Sol. 1	600	Sol. 1	Ak Ao-10%	1250	130	41	No	1500x1200x750	≤ 1250	Heavy	C4M	No	No
GST001/1162N	Romania	in progress	100	KNAN	10	±2x2.5%	0,42	12/75/28	1.1/--/10	50	3P	Dyn11	4	Sol. 1	600	Sol. 1	Ak Ao-10%	1250	130	41	No	1500x1200x750	≤ 1250	Heavy	C4M	No	No
GST001/1163	Romania	in progress	2000	ONAN	20	±2x2.5%	0,42	24/125/50	1.1/--/10	50	3P	Dyn11	6	Sol. 1	600	Sol. 1	Ak Ao-10%	15000	1305	60	Yes	2200x2220x1450	no specific limits	Heavy	C4M	No	No
GST001/1163N	Romania	in progress	2000	KNAN	20	±2x2.5%	0,42	24/125/50	1.1/--/10	50	3P	Dyn11	6	Sol. 1	600	Sol. 1	Ak Ao-10%	15000	1305	60	Yes	2200x2220x1450	no specific limits	Heavy	C4M	No	No
GST001/1164	Romania	in progress	2500	ONAN	20	±2x2.5%	0,42	24/125/50	1.1/--/10	50	3P	Dyn11	6	Sol. 1	600	Sol. 1	Ak Ao-10%	18500	1575	63	Yes	2250x1800x2250	no specific limits	Heavy	C4M	No	No
GST001/1164N	Romania	in progress	2500	KNAN	20	±2x2.5%	0,42	24/125/50	1.1/--/10	50	3P	Dyn11	6	Sol. 1	600	Sol. 1	Ak Ao-10%	18500	1575	63	Yes	2250x1800x2250	no specific limits	Heavy	C4M	No	No
GST001/1165	Romania	in progress	25	ONAN	20	±2x2.5%	1	24/125/50	1.1/--/10	50	3P	Dyn11	4	Sol. 1	600	Sol. 1	Ak Ao-10%	600	63	37	No	1350x1120x710	≤ 1250	Heavy	C4M	No	No
GST001/1165N	Romania	in progress	25	KNAN	20	±2x2.5%	1	24/125/50	1.1/--/10	50	3P	Dyn11	4	Sol. 1	600	Sol. 1	Ak Ao-10%	600	63	37	No	1350x1120x710	≤ 1250	Heavy	C4M	No	No
GST001/1166	Romania	in progress	800	ONAN	6	±2x2.5%	0,42	7,2/60/20	1.1/--/10	50	3P	Dyn11	6	Sol. 4	N/A	Sol. 1	Ak Ao-10%	6000	585	53	Yes	1950x1850x1000	no specific limits	Heavy	C4M	No	No
GST001/1166N	Romania	in progress	800	KNAN	6	±2x2.5%	0,42	7,2/60/20	1.1/--/10	50	3P	Dyn11	6	Sol. 4	N/A	Sol. 1	Ak Ao-10%	6000	585	53	Yes	1950x1850x1000	no specific limits	Heavy	C4M	No	No

GST001/1201	Spain	111183	50	ONAN	13,2	±2x2.5% +10%	0,420	24/125/50	1.1/20/10	50	3P	Dyn11	4	Sol. 1	600	Sol. 1	Ak Ao-10%	750	81	39	No	1520x1100x740	790	Medium	C3H	Yes	Yes
GST001/1202	Spain	111178	50	ONAN	15,4	±2x2.5%	0,420	24/125/50	1.1/20/10	50	3P	Dyn11	4	Sol. 1	600	Sol. 1	Ak Ao-10%	750	81	39	No	1520x1100x740	790	Heavy	C3H	Yes	Yes
GST001/1203	Spain	111157	50	ONAN	16	±2x2.5% +10%	0,420	24/125/50	1.1/20/10	50	3P	Dyn11	4	Sol. 1	600	Sol. 1	Ak Ao-10%	750	81	39	No	1520x1100x740	790	Medium	C3H	Yes	Yes
GST001/1204	Spain	111146	50	ONAN	20	±2x2.5% +10%	0,420	24/125/50	1.1/20/10	50	3P	Dyn11	4	Sol. 1	600	Sol. 1	Ak Ao-10%	750	81	39	No	1520x1100x740	790	Medium	C3H	Yes	Yes
GST001/1204N	Spain	111208	50	KNAN	20	±2x2.5% +10%	0,420	24/125/50	1.1/20/10	50	3P	Dyn11	4	Sol. 1	600	Sol. 1	Ak Ao-10%	750	81	39	No	1520x1100x740	790	Medium	C3H	Yes	Yes
GST001/1205	Spain	111150	50	ONAN	20	±2x2.5% +10%	0,420	24/125/50	1.1/20/10	50	3P	Dyn11	4	Sol. 5	N/A	Sol. 1	Ak Ao-10%	750	81	39	Yes	1350x1100x740	790	Very Heavy	C4H	Yes	No
GST001/1206	Spain	111142	50	ONAN	20	±2x2.5% +10%	0,242-0,420	24/125/50	1.1/20/10	50	3P	Dyn11	4 (0,420kV) 4 (0,242kV)	Sol. 5	N/A	Sol. 1	Ak Ao-10%	750	81	39	Yes	1350x1100x740	790	Very Heavy	C4H	Yes	No
GST001/1207	Spain	111116	50	ONAN	25	±2x2.5% +10%	0,420	36/170/70	1.1/20/10	50	3P	Dyn11	4,5	Sol. 3	900	Sol. 1	Ak+10% A0-10%+15%	825	93	43	No	1650x1100x780	950	Heavy	C3H	Yes	Yes
GST001/1207N	Spain	111198	50	KNAN	25	±2x2.5% +10%	0,420	36/170/70	1.1/20/10	50	3P	Dyn11	4,5	Sol. 3	900	Sol. 1	Ak+10% A0-10%+15%	825	93	43	No	1650x1100x780	950	Heavy	C3H	Yes	Yes
GST001/1208	Spain	111111	50	ONAN	25	±2x2.5% +10%	0,242-0,420	36/170/70	1.1/20/10	50	3P	Dyn11	4,5 (0,420kV) 4,5 (0,242kV)	Sol. 3	900	Sol. 1	Ak+10% A0-10%+15%	825	93	43	No	1650x1100x780	950	Heavy	C3H	Yes	Yes
GST001/1209	Spain	111094	50	ONAN	15,4-20	±2x2.5% +10%	0,420	24/125/50	1.1/20/10	50	3P	Dyn11	4	Sol. 1	600	Sol. 1	Ak+10% A0-10%+15%	825	93	39	No	1520x1100x740	790	Medium	C3H	Yes	Yes
GST001/1209N	Spain	111218	50	KNAN	15,4-20	±2x2.5% +10%	0,420	24/125/50	1.1/20/10	50	3P	Dyn11	4	Sol. 1	600	Sol. 1	Ak+10% A0-10%+15%	825	93	39	No	1520x1100x740	790	Medium	C3H	Yes	Yes
GST001/1210	Spain	111065	50	ONAN	9,5-16,455	-2x5% +3x5%	0,420	24/125/50	1.1/20/10	50	3P	Yzn11 - Dzn0	4	Sol. 1	600	Sol. 1	Ak+10% A0-10%+15%	825	93	39	No	1520x1100x740	790	Medium	C3H	Yes	Yes
GST001/1211	Spain	111177	100	ONAN	15,4	±2x2.5%	0,420	24/125/50	1.1/20/10	50	3P	Dyn11	4	Sol. 1	600	Sol. 1	Ak Ao-10%	1250	130	41	No	1520x1100x740	790	Heavy	C3H	Yes	Yes
GST001/1211N	Spain	111209	100	KNAN	15,4	±2x2.5%	0,420	24/125/50	1.1/20/10	50	3P	Dyn11	4	Sol. 1	600	Sol. 1	Ak Ao-10%	1250	130	41	No	1520x1100x740	790	Heavy	C3H	Yes	Yes
GST001/1212	Spain	111156	100	ONAN	16	±2x2.5%	0,420	24/125/50	1.1/20/10	50	3P	Dyn11	4	Sol. 1	600	Sol. 1	Ak Ao-10%	1250	130	41	No	1520x1100x740	790	Medium	C3H	Yes	Yes

GST001/1213	Spain	111153	100	ONAN	20	±2x2.5% +10%	0,420	24/125/50	1.1/20/10	50	3P	Dyn11	4	Sol. 1	600	Sol. 1	Ak Ao-10%	1250	130	41	No	1520x1100x740	790	Medium	C3H	Yes	Yes
GST001/1213N	Spain	111207	100	KNAN	20	±2x2.5% +10%	0,420	24/125/50	1.1/20/10	50	3P	Dyn11	4	Sol. 1	600	Sol. 1	Ak Ao-10%	1250	130	41	No	1520x1100x740	790	Medium	C3H	Yes	Yes
GST001/1214	Spain	111141	100	ONAN	20	±2x2.5% +10%	0,420	24/125/50	1.1/20/10	50	3P	Dyn11	4	Sol. 5	N/A	Sol. 1	Ak Ao-10%	1250	130	41	Yes	1350x1100x740	790	Very Heavy	C4H	Yes	No
GST001/1215	Spain	111145	100	ONAN	20	±2x2.5% +10%	0,242-0,420	24/125/50	1.1/20/10	50	3P	Dyn11	4 (0,420kV) 4 (0,242kV)	Sol. 5	N/A	Sol. 1	Ak Ao-10%	1250	130	41	Yes	1350x1100x740	790	Very Heavy	C4H	Yes	No
GST001/1216	Spain	111144	100	ONAN	20	±2x2.5% +10%	0,242-0,420	24/125/50	1.1/20/10	50	3P	Dyn11	4 (0,420kV) 4 (0,242kV)	Sol. 1	600	Sol. 1	Ak Ao-10%	1250	130	41	No	1520x1100x740	790	Medium	C3H	Yes	Yes
GST001/1217	Spain	111113	100	ONAN	25	±2x2.5% +10%	0,420	36/170/70	1.1/20/10	50	3P	Dyn11	4,5	Sol. 3	900	Sol. 1	Ak+10% A0-10%+15%	1375	150	45	No	1650x1100x780	950	Heavy	C3H	Yes	Yes
GST001/1217N	Spain	111197	100	KNAN	25	±2x2.5% +10%	0,420	36/170/70	1.1/20/10	50	3P	Dyn11	4,5	Sol. 3	900	Sol. 1	Ak+10% A0-10%+15%	1375	150	45	No	1650x1100x780	950	Heavy	C3H	Yes	Yes
GST001/1218	Spain	111112	100	ONAN	25	±2x2.5% +10%	0,242-0,420	36/170/70	1.1/20/10	50	3P	Dyn11	4,5 (0,420kV) 4,5 (0,242kV)	Sol. 3	900	Sol. 1	Ak+10% A0-10%+15%	1375	150	45	No	1650x1100x780	950	Heavy	C3H	Yes	Yes
GST001/1219	Spain	111092	100	ONAN	15,4-20	±2x2.5% +10%	0,420	24/125/50	1.1/20/10	50	3P	Dyn11	4	Sol. 1	600	Sol. 1	Ak+10% A0-10%+15%	1375	150	41	No	1520x1100x740	790	Medium	C3H	Yes	Yes
GST001/1219N	Spain	111211	100	KNAN	15,4-20	±2x2.5% +10%	0,420	24/125/50	1.1/20/10	50	3P	Dyn11	4	Sol. 1	600	Sol. 1	Ak+10% A0-10%+15%	1375	150	41	No	1520x1100x740	790	Medium	C3H	Yes	Yes
GST001/1220	Spain	111058	100	ONAN	9,5-16,455	-2x5% +3x5%	0,420	24/125/50	1.1/20/10	50	3P	Yzn11 - Dzn0	4	Sol. 1	600	Sol. 1	Ak+10% A0-10%+15%	1375	150	41	No	1520x1100x740	790	Medium	C3H	Yes	Yes
GST001/1221	Spain	111056	100	ONAN	9,5-16,455	-2x5% +3x5%	0,242-0,420	24/125/50	1.1/20/10	50	3P	Yyn0-Dyn11	4 (0,420kV) 4 (0,242kV)	Sol. 1	600	Sol. 1	Ak+10% A0-10%+15%	1375	150	41	No	1520x1100x740	790	Medium	C3H	Yes	Yes
GST001/1222	Spain	111189	160	ONAN	13,2	±2x2.5% +10%	0,242-0,420	24/125/50	1.1/20/10	50	3P	Dyn11	4 (0,420kV) 4 (0,242kV)	Sol. 1	600	Sol. 1 - Sol.2	Ak Ao-10%	1750	189	44	Yes	1570x1200x830	1050	Medium	C3H	Yes	Yes
GST001/1223	Spain	111170	160	ONAN	15,4	±2x2.5%	0,420	24/125/50	1.1/20/10	50	3P	Dyn11	4	Sol. 1	600	Sol. 1	Ak Ao-10%	1750	189	44	Yes	1570x1200x830	1050	Heavy	C3H	Yes	Yes

GST001/1224	Spain	111181	160	ONAN	15,4	±2x2.5%	0,242-0,420	24/125/50	1.1/20/10	50	3P	Dyn11	4 (0,420kV) 4 (0,242kV)	Sol. 1	600	Sol. 1 - Sol.2	Ak Ao-10%	1750	189	44	Yes	1570x1200x830	1050	Heavy	C3H	Yes	Yes
GST001/1225	Spain	111152	160	ONAN	16	±2x2.5% +10%	0,420	24/125/50	1.1/20/10	50	3P	Dyn11	4	Sol. 1	600	Sol. 1	Ak Ao-10%	1750	189	44	Yes	1570x1200x830	1050	Medium	C3H	Yes	Yes
GST001/1226	Spain	111160	160	ONAN	16	±2x2.5% +10%	0,242-0,420	24/125/50	1.1/20/10	50	3P	Dyn11	4 (0,420kV) 4 (0,242kV)	Sol. 1	600	Sol. 1 - Sol.2	Ak Ao-10%	1750	189	44	Yes	1570x1200x830	1050	Medium	C3H	Yes	Yes
GST001/1227	Spain	111137	160	ONAN	20	±2x2.5% +10%	0,420	24/125/50	1.1/20/10	50	3P	Dyn11	4	Sol. 1	600	Sol. 1	Ak Ao-10%	1750	189	44	Yes	1570x1200x830	1050	Medium	C3H	Yes	Yes
GST001/1227N	Spain	111205	160	KNAN	20	±2x2.5% +10%	0,420	24/125/50	1.1/20/10	50	3P	Dyn11	4	Sol. 1	600	Sol. 1	Ak Ao-10%	1750	189	44	Yes	1570x1200x830	1050	Medium	C3H	Yes	Yes
GST001/1228	Spain	111143	160	ONAN	20	±2x2.5% +10%	0,242-0,420	24/125/50	1.1/20/10	50	3P	Dyn11	4 (0,420kV) 4 (0,242kV)	Sol. 1	600	Sol. 1 - Sol.2	Ak Ao-10%	1750	189	44	Yes	1570x1200x830	1050	Medium	C3H	Yes	Yes
GST001/1228N	Spain	111204	160	KNAN	20	±2x2.5% +10%	0,242-0,420	24/125/50	1.1/20/10	50	3P	Dyn11	4 (0,420kV) 4 (0,242kV)	Sol. 1	600	Sol. 1 - Sol.2	Ak Ao-10%	1750	189	44	Yes	1570x1200x830	1050	Medium	C3H	Yes	Yes
GST001/1229	Spain	111140	160	ONAN	20	±2x2.5% +10%	0,420	24/125/50	1.1/20/10	50	3P	Dyn11	4	Sol. 5	N/A	Sol. 1	Ak Ao-10%	1750	189	44	Yes	1350x1200x830	1050	Very Heavy	C4H	Yes	No
GST001/1229N	Spain	111206	160	KNAN	20	±2x2.5% +10%	0,420	24/125/50	1.1/20/10	50	3P	Dyn11	4	Sol. 5	N/A	Sol. 1	Ak Ao-10%	1750	189	44	Yes	1350x1200x830	1050	Very Heavy	C4H	Yes	No
GST001/1230	Spain	111138	160	ONAN	20	±2x2.5% +10%	0,242-0,420	24/125/50	1.1/20/10	50	3P	Dyn11	4 (0,420kV) 4 (0,242kV)	Sol. 5	N/A	Sol. 1 - Sol.2	Ak Ao-10%	1750	189	44	Yes	1350x1200x830	1050	Very Heavy	C4H	Yes	No
GST001/1231	Spain	111109	160	ONAN	25	±2x2.5% +10%	0,420	36/170/70	1.1/20/10	50	3P	Dyn11	4,5	Sol. 3	900	Sol. 1	Ak+10% A0-10%+15%	1925	217	48	Yes	1770x1300x850	1200	Heavy	C3H	Yes	Yes
GST001/1231N	Spain	111196	160	KNAN	25	±2x2.5% +10%	0,420	36/170/70	1.1/20/10	50	3P	Dyn11	4,5	Sol. 3	900	Sol. 1	Ak+10% A0-10%+15%	1925	217	48	Yes	1770x1300x850	1200	Heavy	C3H	Yes	Yes
GST001/1232	Spain	111108	160	ONAN	25	±2x2.5% +10%	0,242-0,420	36/170/70	1.1/20/10	50	3P	Dyn11	4,5 (0,420kV) 4,5 (0,242kV)	Sol. 3	900	Sol. 1 - Sol.2	Ak+10% A0-10%+15%	1925	217	48	Yes	1770x1300x850	1200	Heavy	C3H	Yes	Yes

GST001/1232N	Spain	111199	160	KNAN	25	±2x2.5% +10%	0,242-0,420	36/170/70	1.1/20/10	50	3P	Dyn11	4,5 (0,420kV) 4,5 (0,242kV)	Sol. 3	900	Sol. 1 - Sol.2	Ak+10% A0-10%+15%	1925	217	48	Yes	1770x1300x850	1200	Heavy	C3H	Yes	Yes
GST001/1233	Spain	111079	160	ONAN	15,4-20	±2x2.5% +10%	0,420	24/125/50	1.1/20/10	50	3P	Dyn11	4	Sol. 1	600	Sol. 1	Ak+10% A0-10%+15%	1925	217	44	Yes	1570x1200x830	1050	Medium	C3H	Yes	Yes
GST001/1233N	Spain	111210	160	KNAN	15,4-20	±2x2.5% +10%	0,420	24/125/50	1.1/20/10	50	3P	Dyn11	4	Sol. 1	600	Sol. 1	Ak+10% A0-10%+15%	1925	217	44	Yes	1570x1200x830	1050	Medium	C3H	Yes	Yes
GST001/1234	Spain	111078	160	ONAN	15,4-20	±2x2.5% +10%	0,242-0,420	24/125/50	1.1/20/10	50	3P	Dyn11	4 (0,420kV) 4 (0,242kV)	Sol. 1	600	Sol. 1 - Sol.2	Ak+10% A0-10%+15%	1925	217	44	Yes	1570x1200x830	1050	Medium	C3H	Yes	Yes
GST001/1234N	Spain	111217	160	KNAN	15,4-20	±2x2.5% +10%	0,242-0,420	24/125/50	1.1/20/10	50	3P	Dyn11	4 (0,420kV) 4 (0,242kV)	Sol. 1	600	Sol. 1 - Sol.2	Ak+10% A0-10%+15%	1925	217	44	Yes	1570x1200x830	1050	Medium	C3H	Yes	Yes
GST001/1235	Spain	111055	160	ONAN	9,5-16,455	-2x5% +3x5%	0,420	24/125/50	1.1/20/10	50	3P	Yyn0-Dyn11	4	Sol. 1	600	Sol. 1	Ak+10% A0-10%+15%	1925	217	44	Yes	1570x1200x830	1050	Medium	C3H	Yes	Yes
GST001/1236	Spain	111051	160	ONAN	9,5-16,455	-2x5% +3x5%	0,242-0,420	24/125/50	1.1/20/10	50	3P	Yyn0-Dyn11	4 (0,420kV) 4 (0,242kV)	Sol. 1	600	Sol. 1 - Sol.2	Ak+10% A0-10%+15%	1925	217	44	Yes	1570x1200x830	1050	Medium	C3H	Yes	Yes
GST001/1237	Spain	111194	250	ONAN	11	±2x2.5% +10%	0,420	12/75/28	1.1/20/10	50	3P	Dyn11	4	Sol. 5	N/A	Sol. 6	Ak Ao-10%	2350	270	47	Yes	1350x1300x910	1400	Heavy	C3H	No	No
GST001/1238	Spain	111193	250	ONAN	11	±2x2.5% +10%	0,242-0,420	12/75/28	1.1/20/10	50	3P	Dyn11	4 (0,420kV) 4 (0,242kV)	Sol. 5	N/A	Sol. 2	Ak Ao-10%	2350	270	47	Yes	1350x1300x910	1400	Heavy	C3H	No	No
GST001/1239	Spain	111192	250	ONAN	13,2	±2x2.5% +10%	0,420	24/125/50	1.1/20/10	50	3P	Dyn11	4	Sol. 5	N/A	Sol. 6	Ak Ao-10%	2350	270	47	Yes	1350x1300x910	1400	Heavy	C3H	No	No
GST001/1240	Spain	111182	250	ONAN	13,2	±2x2.5% +10%	0,242-0,420	24/125/50	1.1/20/10	50	3P	Dyn11	4 (0,420kV) 4 (0,242kV)	Sol. 5	N/A	Sol. 2	Ak Ao-10%	2350	270	47	Yes	1350x1300x910	1400	Heavy	C3H	No	No
GST001/1241	Spain	111169	250	ONAN	15,4	±2x2.5%	0,420	24/125/50	1.1/20/10	50	3P	Dyn11	4	Sol. 5	N/A	Sol. 6	Ak Ao-10%	2350	270	47	Yes	1350x1300x910	1400	Heavy	C3H	No	No
GST001/1242	Spain	111171	250	ONAN	15,4	±2x2.5%	0,242-0,420	24/125/50	1.1/20/10	50	3P	Dyn11	4 (0,420kV) 4 (0,242kV)	Sol. 5	N/A	Sol. 2	Ak Ao-10%	2350	270	47	Yes	1350x1300x910	1400	Heavy	C3H	No	No

GST001/1243	Spain	111151	250	ONAN	16	±2x2.5% +10%	0,420	24/125/50	1.1/20/10	50	3P	Dyn11	4	Sol. 5	N/A	Sol. 6	Ak Ao-10%	2350	270	47	Yes	1350x1300x910	1400	Heavy	C3H	No	No
GST001/1244	Spain	111155	250	ONAN	16	±2x2.5% +10%	0,242-0,420	24/125/50	1.1/20/10	50	3P	Dyn11	4 (0,420kV) 4 (0,242kV)	Sol. 5	N/A	Sol. 2	Ak Ao-10%	2350	270	47	Yes	1350x1300x910	1400	Heavy	C3H	No	No
GST001/1245	Spain	111135	250	ONAN	20	±2x2.5% +10%	0,420	24/125/50	1.1/20/10	50	3P	Dyn11	4	Sol. 5	N/A	Sol. 6	Ak Ao-10%	2350	270	47	Yes	1350x1300x910	1400	Heavy	C3H	No	No
GST001/1245N	Spain	111203	250	KNAN	20	±2x2.5% +10%	0,420	24/125/50	1.1/20/10	50	3P	Dyn11	4	Sol. 5	N/A	Sol. 6	Ak Ao-10%	2350	270	47	Yes	1350x1300x910	1400	Heavy	C3H	No	No
GST001/1246	Spain	111136	250	ONAN	20	±2x2.5% +10%	0,242-0,420	24/125/50	1.1/20/10	50	3P	Dyn11	4 (0,420kV) 4 (0,242kV)	Sol. 5	N/A	Sol. 2	Ak Ao-10%	2350	270	47	Yes	1350x1300x910	1400	Heavy	C3H	No	No
GST001/1247	Spain	111134	250	ONAN	20	±2x2.5% +10%	0,420	24/125/50	1.1/20/10	50	3P	Dyn11	4	Sol. 5	N/A	Sol. 6	Ak Ao-10%	2350	270	47	Yes	1350x1300x910	1400	Very Heavy	C4H	No	No
GST001/1247N	Spain	111202	250	KNAN	20	±2x2.5% +10%	0,420	24/125/50	1.1/20/10	50	3P	Dyn11	4	Sol. 5	N/A	Sol. 6	Ak Ao-10%	2350	270	47	Yes	1350x1300x910	1400	Very Heavy	C4H	No	No
GST001/1248	Spain	111139	250	ONAN	20	±2x2.5% +10%	0,242-0,420	24/125/50	1.1/20/10	50	3P	Dyn11	4 (0,420kV) 4 (0,242kV)	Sol. 5	N/A	Sol. 2	Ak Ao-10%	2350	270	47	Yes	1350x1300x910	1400	Very Heavy	C4H	No	No
GST001/1249	Spain	111107	250	ONAN	25	±2x2.5% +10%	0,420	36/170/70	1.1/20/10	50	3P	Dyn11	4,5	Sol. 5	N/A	Sol. 6	Ak+10% A0-10%+15%	2585	311	51	Yes	1350x1350x980	1600	Heavy	C3H	No	No
GST001/1249N	Spain	111215	250	KNAN	25	±2x2.5% +10%	0,420	36/170/70	1.1/20/10	50	3P	Dyn11	4,5	Sol. 5	N/A	Sol. 6	Ak+10% A0-10%+15%	2585	311	51	Yes	1350x1350x980	1600	Heavy	C3H	No	No
GST001/1250	Spain	111105	250	ONAN	25	±2x2.5% +10%	0,242-0,420	36/170/70	1.1/20/10	50	3P	Dyn11	4,5 (0,420kV) 4,5 (0,242kV)	Sol. 5	N/A	Sol. 2	Ak+10% A0-10%+15%	2585	311	51	Yes	1350x1350x980	1600	Heavy	C3H	No	No
GST001/1251	Spain	111076	250	ONAN	15,4-20	±2x2.5% +10%	0,420	24/125/50	1.1/20/10	50	3P	Dyn11	4	Sol. 5	N/A	Sol. 6	Ak+10% A0-10%+15%	2585	311	47	Yes	1350x1300x910	1400	Heavy	C3H	No	No
GST001/1252	Spain	111075	250	ONAN	15,4-20	±2x2.5% +10%	0,242-0,420	24/125/50	1.1/20/10	50	3P	Dyn11	4 (0,420kV) 4 (0,242kV)	Sol. 5	N/A	Sol. 2	Ak+10% A0-10%+15%	2585	311	47	Yes	1350x1300x910	1400	Heavy	C3H	No	No
GST001/1253	Spain	111066	250	ONAN	9,5-16,455	-2x5% +3x5%	0,420	24/125/50	1.1/20/10	50	3P	Yyn0-Dyn11	4	Sol. 5	N/A	Sol. 6	Ak+10% A0-10%+15%	2585	311	47	Yes	1350x1300x910	1400	Heavy	C3H	No	No

GST001/1254	Spain	111053	250	ONAN	9,5-16,455	-2x5% +3x5%	0,242-0,420	24/125/50	1.1/20/10	50	3P	Yyn0-Dyn11	4 (0,420kV) 4 (0,242kV)	Sol. 5	N/A	Sol. 2	Ak+10% A0-10%+15%	2585	311	47	Yes	1350x1300x910	1400	Heavy	C3H	No	No
GST001/1255	Spain	111190	400	ONAN	11	±2x2.5% +10%	0,420	12/75/28	1.1/20/10	50	3P	Dyn11	4	Sol. 5	N/A	Sol. 6	Ak Ao-10%	3250	387	50	Yes	1750x1620x1020	1950	Heavy	C3H	No	No
GST001/1256	Spain	111188	400	ONAN	11	±2x2.5% +10%	0,242-0,420	12/75/28	1.1/20/10	50	3P	Dyn11	4 (0,420kV) 4 (0,242kV)	Sol. 5	N/A	Sol.2 - Sol.3	Ak Ao-10%	3250	387	50	Yes	1750x1620x1020	1950	Heavy	C3H	No	No
GST001/1257	Spain	111180	400	ONAN	13,2	±2x2.5% +10%	0,420	24/125/50	1.1/20/10	50	3P	Dyn11	4	Sol. 5	N/A	Sol. 6	Ak Ao-10%	3250	387	50	Yes	1750x1620x1020	1950	Heavy	C3H	No	No
GST001/1258	Spain	111179	400	ONAN	13,2	±2x2.5% +10%	0,242-0,420	24/125/50	1.1/20/10	50	3P	Dyn11	4 (0,420kV) 4 (0,242kV)	Sol. 5	N/A	Sol.2 - Sol.3	Ak Ao-10%	3250	387	50	Yes	1750x1620x1020	1950	Heavy	C3H	No	No
GST001/1259	Spain	111166	400	ONAN	15,4	±2x2.5%	0,420	24/125/50	1.1/20/10	50	3P	Dyn11	4	Sol. 5	N/A	Sol. 6	Ak Ao-10%	3250	387	50	Yes	1750x1620x1020	1950	Heavy	C3H	No	No
GST001/1260	Spain	111164	400	ONAN	15,4	±2x2.5%	0,242-0,420	24/125/50	1.1/20/10	50	3P	Dyn11	4 (0,420kV) 4 (0,242kV)	Sol. 5	N/A	Sol.2 - Sol.3	Ak Ao-10%	3250	387	50	Yes	1750x1620x1020	1950	Heavy	C3H	No	No
GST001/1261	Spain	111154	400	ONAN	16	±2x2.5% +10%	0,420	24/125/50	1.1/20/10	50	3P	Dyn11	4	Sol. 5	N/A	Sol. 6	Ak Ao-10%	3250	387	50	Yes	1750x1620x1020	1950	Heavy	C3H	No	No
GST001/1262	Spain	111148	400	ONAN	16	±2x2.5% +10%	0,242-0,420	24/125/50	1.1/20/10	50	3P	Dyn11	4 (0,420kV) 4 (0,242kV)	Sol. 5	N/A	Sol.2 - Sol.3	Ak Ao-10%	3250	387	50	Yes	1750x1620x1020	1950	Heavy	C3H	No	No
GST001/1263	Spain	111133	400	ONAN	20	±2x2.5% +10%	0,420	24/125/50	1.1/20/10	50	3P	Dyn11	4	Sol. 5	N/A	Sol. 6	Ak Ao-10%	3250	387	50	Yes	1750x1620x1020	1950	Heavy	C3H	No	No
GST001/1263N	Spain	111214	400	KNAN	20	±2x2.5% +10%	0,420	24/125/50	1.1/20/10	50	3P	Dyn11	4	Sol. 5	N/A	Sol. 6	Ak Ao-10%	3250	387	50	Yes	1750x1620x1020	1950	Heavy	C3H	No	No
GST001/1264	Spain	111132	400	ONAN	20	±2x2.5% +10%	0,242-0,420	24/125/50	1.1/20/10	50	3P	Dyn11	4 (0,420kV) 4 (0,242kV)	Sol. 5	N/A	Sol.2 - Sol.3	Ak Ao-10%	3250	387	50	Yes	1750x1620x1020	1950	Heavy	C3H	No	No
GST001/1265	Spain	111131	400	ONAN	20	±2x2.5% +10%	0,420	24/125/50	1.1/20/10	50	3P	Dyn11	4	Sol. 5	N/A	Sol. 6	Ak Ao-10%	3250	387	50	Yes	1750x1620x1020	1950	Very Heavy	C4H	No	No

GST001/1265N	Spain	111200	400	KNAN	20	±2x2.5% +10%	0,420	24/125/50	1.1/20/10	50	3P	Dyn11	4	Sol. 5	N/A	Sol. 6	Ak Ao-10%	3250	387	50	Yes	1750x1620x1020	1950	Very Heavy	C4H	No	No
GST001/1266	Spain	111129	400	ONAN	20	±2x2.5% +10%	0,242-0,420	24/125/50	1.1/20/10	50	3P	Dyn11	4 (0,420kV) 4 (0,242kV)	Sol. 5	N/A	Sol.2 - Sol.3	Ak Ao-10%	3250	387	50	Yes	1750x1620x1020	1950	Very Heavy	C4H	No	No
GST001/1267	Spain	111104	400	ONAN	25	±2x2.5% +10%	0,420	36/170/70	1.1/20/10	50	3P	Dyn11	4,5	Sol. 5	N/A	Sol. 6	Ak+10% A0-10%+15%	3575	445	54	Yes	1900x1670x1050	2200	Heavy	C3H	No	No
GST001/1267N	Spain	111106	400	KNAN	25	±2x2.5% +10%	0,420	36/170/70	1.1/20/10	50	3P	Dyn11	4,5	Sol. 5	N/A	Sol. 6	Ak+10% A0-10%+15%	3575	445	54	Yes	1900x1670x1050	2200	Heavy	C3H	No	No
GST001/1268	Spain	111103	400	ONAN	25	±2x2.5% +10%	0,242-0,420	36/170/70	1.1/20/10	50	3P	Dyn11	4,5 (0,420kV) 4,5 (0,242kV)	Sol. 5	N/A	Sol.2 - Sol.3	Ak+10% A0-10%+15%	3575	445	54	Yes	1900x1670x1050	2200	Heavy	C3H	No	No
GST001/1268N	Spain	111216	400	KNAN	25	±2x2.5% +10%	0,242-0,420	36/170/70	1.1/20/10	50	3P	Dyn11	4,5 (0,420kV) 4,5 (0,242kV)	Sol. 5	N/A	Sol.2 - Sol.3	Ak+10% A0-10%+15%	3575	445	54	Yes	1900x1670x1050	2200	Heavy	C3H	No	No
GST001/1269	Spain	111074	400	ONAN	15,4-20	±2x2.5% +10%	0,420	24/125/50	1.1/20/10	50	3P	Dyn11	4	Sol. 5	N/A	Sol. 6	Ak+10% A0-10%+15%	3575	445	50	Yes	1750x1620x1020	1950	Heavy	C3H	No	No
GST001/1269N	Spain	111212	400	KNAN	15,4-20	±2x2.5% +10%	0,420	24/125/50	1.1/20/10	50	3P	Dyn11	4	Sol. 5	N/A	Sol. 6	Ak+10% A0-10%+15%	3575	445	50	Yes	1750x1620x1020	1950	Heavy	C3H	No	No
GST001/1270	Spain	111073	400	ONAN	15,4-20	±2x2.5% +10%	0,242-0,420	24/125/50	1.1/20/10	50	3P	Dyn11	4 (0,420kV) 4 (0,242kV)	Sol. 5	N/A	Sol.2 - Sol.3	Ak+10% A0-10%+15%	3575	445	50	Yes	1750x1620x1020	1950	Heavy	C3H	No	No
GST001/1271	Spain	111048	400	ONAN	9,5-16,455	-2x5% +3x5%	0,420	24/125/50	1.1/20/10	50	3P	Yyn0-Dyn11	4	Sol. 5	N/A	Sol. 6	Ak+10% A0-10%+15%	3575	445	50	Yes	1750x1620x1020	1950	Heavy	C3H	No	No
GST001/1272	Spain	111049	400	ONAN	9,5-16,455	-2x5% +3x5%	0,242-0,420	24/125/50	1.1/20/10	50	3P	Yyn0-Dyn11	4 (0,420kV) 4 (0,242kV)	Sol. 5	N/A	Sol.2 - Sol.3	Ak+10% A0-10%+15%	3575	445	50	Yes	1750x1620x1020	1950	Heavy	C3H	No	No
GST001/1273	Spain	111187	630	ONAN	11	±2x2.5% +10%	0,420	12/75/28	1.1/20/10	50	3P	Dyn11	4	Sol. 5	N/A	Sol. 6	Ak Ao-10%	4600	540	52	Yes	1870x1790x1140	2600	Heavy	C3H	No	No
GST001/1274	Spain	111186	630	ONAN	11	±2x2.5% +10%	0,242-0,420	12/75/28	1.1/20/10	50	3P	Dyn11	4 (0,420kV) 4 (0,242kV)	Sol. 5	N/A	Sol.3 - Sol.4	Ak Ao-10%	4600	540	52	Yes	1870x1790x1140	2600	Heavy	C3H	No	No

GST001/1275	Spain	111176	630	ONAN	13,2	±2x2.5% +10%	0,420	24/125/50	1.1/20/10	50	3P	Dyn11	4	Sol. 5	N/A	Sol. 6	Ak Ao-10%	4600	540	52	Yes	1870x1790x1140	2600	Heavy	C3H	No	No
GST001/1276	Spain	111175	630	ONAN	13,2	±2x2.5% +10%	0,242-0,420	24/125/50	1.1/20/10	50	3P	Dyn11	4 (0,420kV) 4 (0,242kV)	Sol. 5	N/A	Sol.3 - Sol.4	Ak Ao-10%	4600	540	52	Yes	1870x1790x1140	2600	Heavy	C3H	No	No
GST001/1277	Spain	111168	630	ONAN	15,4	±2x2.5%	0,420	24/125/50	1.1/20/10	50	3P	Dyn11	4	Sol. 5	N/A	Sol. 6	Ak Ao-10%	4600	540	52	Yes	1870x1790x1140	2600	Heavy	C3H	No	No
GST001/1278	Spain	111165	630	ONAN	15,4	±2x2.5%	0,242-0,420	24/125/50	1.1/20/10	50	3P	Dyn11	4 (0,420kV) 4 (0,242kV)	Sol. 5	N/A	Sol.3 - Sol.4	Ak Ao-10%	4600	540	52	Yes	1870x1790x1140	2600	Heavy	C3H	No	No
GST001/1279	Spain	111147	630	ONAN	16	±2x2.5% +10%	0,420	24/125/50	1.1/20/10	50	3P	Dyn11	4	Sol. 5	N/A	Sol. 6	Ak Ao-10%	4600	540	52	Yes	1870x1790x1140	2600	Heavy	C3H	No	No
GST001/1280	Spain	111149	630	ONAN	16	±2x2.5% +10%	0,242-0,420	24/125/50	1.1/20/10	50	3P	Dyn11	4 (0,420kV) 4 (0,242kV)	Sol. 5	N/A	Sol.3 - Sol.4	Ak Ao-10%	4600	540	52	Yes	1870x1790x1140	2600	Heavy	C3H	No	No
GST001/1281	Spain	111128	630	ONAN	20	±2x2.5% +10%	0,420	24/125/50	1.1/20/10	50	3P	Dyn11	4	Sol. 5	N/A	Sol. 6	Ak Ao-10%	4600	540	52	Yes	1870x1790x1140	2600	Heavy	C3H	No	No
GST001/1281N	Spain	111130	630	KNAN	20	±2x2.5% +10%	0,420	24/125/50	1.1/20/10	50	3P	Dyn11	4	Sol. 5	N/A	Sol. 6	Ak Ao-10%	4600	540	52	Yes	1870x1790x1140	2600	Heavy	C3H	No	No
GST001/1282	Spain	111125	630	ONAN	20	±2x2.5% +10%	0,242-0,420	24/125/50	1.1/20/10	50	3P	Dyn11	4 (0,420kV) 4 (0,242kV)	Sol. 5	N/A	Sol.3 - Sol.4	Ak Ao-10%	4600	540	52	Yes	1870x1790x1140	2600	Heavy	C3H	No	No
GST001/1283	Spain	111127	630	ONAN	20	±2x2.5% +10%	0,420	24/125/50	1.1/20/10	50	3P	Dyn11	4	Sol. 5	N/A	Sol. 6	Ak Ao-10%	4600	540	52	Yes	1870x1790x1140	2600	Very Heavy	C4H	No	No
GST001/1283N	Spain	111201	630	KNAN	20	±2x2.5% +10%	0,420	24/125/50	1.1/20/10	50	3P	Dyn11	4	Sol. 5	N/A	Sol. 6	Ak Ao-10%	4600	540	52	Yes	1870x1790x1140	2600	Very Heavy	C4H	No	No
GST001/1284	Spain	111126	630	ONAN	20	±2x2.5% +10%	0,242-0,420	24/125/50	1.1/20/10	50	3P	Dyn11	4 (0,420kV) 4 (0,242kV)	Sol. 5	N/A	Sol.3 - Sol.4	Ak Ao-10%	4600	540	52	Yes	1870x1790x1140	2600	Very Heavy	C4H	No	No
GST001/1285	Spain	111101	630	ONAN	25	±2x2.5% +10%	0,420	36/170/70	1.1/20/10	50	3P	Dyn11	4,5	Sol. 5	N/A	Sol. 6	Ak+10% A0-10%+15%	5060	621	56	Yes	2000x1850x1170	2900	Heavy	C3H	No	No
GST001/1285N	Spain	111102	630	KNAN	25	±2x2.5% +10%	0,420	36/170/70	1.1/20/10	50	3P	Dyn11	4,5	Sol. 5	N/A	Sol. 6	Ak+10% A0-10%+15%	5060	621	56	Yes	2000x1850x1170	2900	Heavy	C3H	No	No

GST001/1286	Spain	111097	630	ONAN	25	±2x2.5% +10%	0,242-0,420	36/170/70	1.1/20/10	50	3P	Dyn11	4,5 (0,420kV) 4,5 (0,242kV)	Sol. 5	N/A	Sol.3 - Sol.4	Ak+10% A0-10%+15%	5060	621	56	Yes	2000x1850x1170	2900	Heavy	C3H	No	No
GST001/1286N	Spain	111213	630	KNAN	25	±2x2.5% +10%	0,242-0,420	36/170/70	1.1/20/10	50	3P	Dyn11	4,5 (0,420kV) 4,5 (0,242kV)	Sol. 5	N/A	Sol.3 - Sol.4	Ak+10% A0-10%+15%	5060	621	56	Yes	2000x1850x1170	2900	Heavy	C3H	No	No
GST001/1287	Spain	111072	630	ONAN	15,4-20	±2x2.5% +10%	0,420	24/125/50	1.1/20/10	50	3P	Dyn11	4	Sol. 5	N/A	Sol. 6	Ak+10% A0-10%+15%	5060	621	52	Yes	1870x1790x1140	2600	Heavy	C3H	No	No
GST001/1287N	Spain	111110	630	KNAN	15,4-20	±2x2.5% +10%	0,420	24/125/50	1.1/20/10	50	3P	Dyn11	4	Sol. 5	N/A	Sol. 6	Ak+10% A0-10%+15%	5060	621	52	Yes	1870x1790x1140	2600	Heavy	C3H	No	No
GST001/1288	Spain	111070	630	ONAN	15,4-20	±2x2.5% +10%	0,242-0,420	24/125/50	1.1/20/10	50	3P	Dyn11	4 (0,420kV) 4 (0,242kV)	Sol. 5	N/A	Sol.3 - Sol.4	Ak+10% A0-10%+15%	5060	621	52	Yes	1870x1790x1140	2600	Heavy	C3H	No	No
GST001/1289	Spain	111052	630	ONAN	9,5-16,455	-2x5% +3x5%	0,420	24/125/50	1.1/20/10	50	3P	Yyn0-Dyn11	4	Sol. 5	N/A	Sol. 6	Ak+10% A0-10%+15%	5060	621	52	Yes	1870x1790x1140	2600	Heavy	C3H	No	No
GST001/1290	Spain	111042	630	ONAN	9,5-16,455	-2x5% +3x5%	0,242-0,420	24/125/50	1.1/20/10	50	3P	Yyn0-Dyn11	4 (0,420kV) 4 (0,242kV)	Sol. 5	N/A	Sol.3 - Sol.4	Ak+10% A0-10%+15%	5060	621	52	Yes	1870x1790x1140	2600	Heavy	C3H	No	No
GST001/1291	Spain	111195	1000	ONAN	11	±2x2.5% +10%	0,420	12/75/28	1.1/20/10	50	3P	Dyn11	6	Sol. 5	N/A	Sol. 6	Ak Ao-10%	7600	693	55	Yes	2080x1990x1190	3400	Heavy	C3H	No	No
GST001/1291N	Spain	111191	1000	KNAN	11	±2x2.5% +10%	0,420	12/75/28	1.1/20/10	50	3P	Dyn11	6	Sol. 5	N/A	Sol. 6	Ak Ao-10%	7600	693	55	Yes	2080x1990x1190	3400	Heavy	C3H	No	No
GST001/1292	Spain	111185	1000	ONAN	11	±2x2.5% +10%	0,242-0,420	12/75/28	1.1/20/10	50	3P	Dyn11	6 (0,420kV) 6 (0,242kV)	Sol. 5	N/A	Sol.4 - Sol.5	Ak+10% A0-10%+15%	8360	797	55	Yes	2080x1990x1190	3400	Heavy	C3H	No	No
GST001/1292N	Spain	111184	1000	KNAN	11	±2x2.5% +10%	0,242-0,420	12/75/28	1.1/20/10	50	3P	Dyn11	6 (0,420kV) 6 (0,242kV)	Sol. 5	N/A	Sol.4 - Sol.5	Ak+10% A0-10%+15%	8360	797	55	Yes	2080x1990x1190	3400	Heavy	C3H	No	No
GST001/1293	Spain	111159	1000	ONAN	15,4	±2x2.5%	0,420	24/125/50	1.1/20/10	50	3P	Dyn11	6	Sol. 5	N/A	Sol. 6	Ak Ao-10%	7600	693	55	Yes	2080x1990x1190	3400	Heavy	C3H	No	No
GST001/1293N	Spain	111161	1000	KNAN	15,4	±2x2.5%	0,420	24/125/50	1.1/20/10	50	3P	Dyn11	6	Sol. 5	N/A	Sol. 6	Ak Ao-10%	7600	693	55	Yes	2080x1990x1190	3400	Heavy	C3H	No	No

GST001/1294	Spain	111122	1000	ONAN	20	±2x2.5% +10%	0,420	24/125/50	1.1/20/10	50	3P	Dyn11	6	Sol. 5	N/A	Sol. 6	Ak Ao-10%	7600	693	55	Yes	2080x1990x1190	3400	Heavy	C3H	No	No
GST001/1294N	Spain	111124	1000	KNAN	20	±2x2.5% +10%	0,420	24/125/50	1.1/20/10	50	3P	Dyn11	6	Sol. 5	N/A	Sol. 6	Ak Ao-10%	7600	693	55	Yes	2080x1990x1190	3400	Heavy	C3H	No	No
GST001/1295	Spain	111114	1000	ONAN	20	±2x2.5% +10%	0,242-0,420	24/125/50	1.1/20/10	50	3P	Dyn11	6 (0,420kV) 6 (0,242kV)	Sol. 5	N/A	Sol.4 - Sol.5	Ak+10% A0-10%+15%	8360	797	55	Yes	2080x1990x1190	3400	Heavy	C3H	No	No
GST001/1295N	Spain	111120	1000	KNAN	20	±2x2.5% +10%	0,242-0,420	24/125/50	1.1/20/10	50	3P	Dyn11	6 (0,420kV) 6 (0,242kV)	Sol. 5	N/A	Sol.4 - Sol.5	Ak+10% A0-10%+15%	8360	797	55	Yes	2080x1990x1190	3400	Heavy	C3H	No	No
GST001/1296	Spain	111118	1000	ONAN	20	±2x2.5% +10%	0,242-0,420	24/125/50	1.1/20/10	50	3P	Dyn11	6 (0,420kV) 6 (0,242kV)	Sol. 5	N/A	Sol.4 - Sol.5	Ak+10% A0-10%+15%	8360	797	55	Yes	2080x1990x1190	3400	Very Heavy	C4H	No	No
GST001/1296N	Spain	111119	1000	KNAN	20	±2x2.5% +10%	0,242-0,420	24/125/50	1.1/20/10	50	3P	Dyn11	6 (0,420kV) 6 (0,242kV)	Sol. 5	N/A	Sol.4 - Sol.5	Ak+10% A0-10%+15%	8360	797	55	Yes	2080x1990x1190	3400	Very Heavy	C4H	No	No
GST001/1297	Spain	111121	1000	ONAN	20	±2x2.5% +10%	0,420	24/125/50	1.1/20/10	50	3P	Dyn11	6	Sol. 5	N/A	Sol. 6	Ak Ao-10%	7600	693	55	Yes	2080x1990x1190	3400	Very Heavy	C4H	No	No
GST001/1297N	Spain	111123	1000	KNAN	20	±2x2.5% +10%	0,420	24/125/50	1.1/20/10	50	3P	Dyn11	6	Sol. 5	N/A	Sol. 6	Ak Ao-10%	7600	693	55	Yes	2080x1990x1190	3400	Very Heavy	C4H	No	No
GST001/1298	Spain	111100	1000	ONAN	25	±2x2.5% +10%	0,420	36/170/70	1.1/20/10	50	3P	Dyn11	6	Sol. 5	N/A	Sol. 6	Ak+10% A0-10%+15%	8360	797	59	Yes	2190x2050x1200	3800	Heavy	C3H	No	No
GST001/1298N	Spain	111099	1000	KNAN	25	±2x2.5% +10%	0,420	36/170/70	1.1/20/10	50	3P	Dyn11	6	Sol. 5	N/A	Sol. 6	Ak+10% A0-10%+15%	8360	797	59	Yes	2190x2050x1200	3800	Heavy	C3H	No	No
GST001/1299	Spain	111096	1000	ONAN	25	±2x2.5% +10%	0,242-0,420	36/170/70	1.1/20/10	50	3P	Dyn11	6 (0,420kV) 6 (0,242kV)	Sol. 5	N/A	Sol.4 - Sol.5	Ak+10%+10% A0-10%+15%+15%	9196	916	60	Yes	2190x2050x1200	3800	Heavy	C3H	No	No
GST001/1299N	Spain	111098	1000	KNAN	25	±2x2.5% +10%	0,242-0,420	36/170/70	1.1/20/10	50	3P	Dyn11	6 (0,420kV) 6 (0,242kV)	Sol. 5	N/A	Sol.4 - Sol.5	Ak+10%+10% A0-10%+15%+15%	9196	916	60	Yes	2190x2050x1200	3800	Heavy	C3H	No	No
GST001/1300	Spain	111064	1000	ONAN	15,4-20	±2x2.5% +10%	0,420	24/125/50	1.1/20/10	50	3P	Dyn11	6	Sol. 5	N/A	Sol. 6	Ak+10% A0-10%+15%	8360	797	55	Yes	2080x1990x1190	3400	Heavy	C3H	No	No

GST001/1300N	Spain	111069	1000	KNAN	15,4-20	±2x2.5% +10%	0,420	24/125/50	1.1/20/10	50	3P	Dyn11	6	Sol. 5	N/A	Sol. 6	Ak+10% A0-10%+15%	8360	797	55	Yes	2080x1990x1190	3400	Heavy	C3H	No	No
GST001/1301	Spain	111068	1000	ONAN	15,4-20	±2x2.5% +10%	0,242-0,420	24/125/50	1.1/20/10	50	3P	Dyn11	6 (0,420kV) 6 (0,242kV)	Sol. 5	N/A	Sol.4 - Sol.5	Ak+20% A0-10%+20%	9120	832	55	Yes	2080x1990x1190	3400	Heavy	C3H	No	No
GST001/1301N	Spain	111071	1000	KNAN	15,4-20	±2x2.5% +10%	0,242-0,420	24/125/50	1.1/20/10	50	3P	Dyn11	6 (0,420kV) 6 (0,242kV)	Sol. 5	N/A	Sol.4 - Sol.5	Ak+20% A0-10%+20%	9120	832	55	Yes	2080x1990x1190	3400	Heavy	C3H	No	No
GST001/1302	Spain	111047	1000	ONAN	9,5-16,455	-2x5% +3x5%	0,420	24/125/50	1.1/20/10	50	3P	Yyn0-Dyn11	6	Sol. 5	N/A	Sol. 6	Ak+10% A0-10%+15%	8360	797	55	Yes	2080x1990x1190	3400	Heavy	C3H	No	No
GST001/1302N	Spain	111054	1000	KNAN	9,5-16,455	-2x5% +3x5%	0,420	24/125/50	1.1/20/10	50	3P	Yyn0-Dyn11	6	Sol. 5	N/A	Sol. 6	Ak+10% A0-10%+15%	8360	797	55	Yes	2080x1990x1190	3400	Heavy	C3H	No	No
GST001/1303	Spain	111046	1000	ONAN	9,5-16,455	-2x5% +3x5%	0,242-0,420	24/125/50	1.1/20/10	50	3P	Yyn0-Dyn11	6 (0,420kV) 6 (0,242kV)	Sol. 5	N/A	Sol.4 - Sol.5	Ak+20% A0-10%+20%	9120	832	55	Yes	2080x1990x1190	3400	Heavy	C3H	No	No
GST001/1303N	Spain	111050	1000	KNAN	9,5-16,455	-2x5% +3x5%	0,242-0,420	24/125/50	1.1/20/10	50	3P	Yyn0-Dyn11	6 (0,420kV) 6 (0,242kV)	Sol. 5	N/A	Sol.4 - Sol.5	Ak+20% A0-10%+20%	9120	832	55	Yes	2080x1990x1190	3400	Heavy	C3H	No	No
GST001/1304	Spain	111173	50	ONAN	15,4	±2x2.5%	0,420	24/125/50	1.1/20/10	50	3P	Dyn11	4	Sol. 5	N/A	Sol. 1	Ak Ao-10%	750	81	39	Yes	1350x1100x740	790	Heavy	C3H	Yes	No
GST001/1305	Spain	111167	50	ONAN	16	±2x2.5% +10%	0,420	24/125/50	1.1/20/10	50	3P	Dyn11	4	Sol. 5	N/A	Sol. 1	Ak Ao-10%	750	81	39	Yes	1350x1100x740	790	Heavy	C3H	Yes	No
GST001/1306	Spain	111115	50	ONAN	25	±2x2.5% +10%	0,420	36/170/70	1.1/20/10	50	3P	Dyn11	4,5	Sol. 5	N/A	Sol. 1	Ak+10% A0-10%+15%	825	93	43	Yes	1350x1100x780	950	Heavy	C3H	Yes	No
GST001/1307	Spain	111095	50	ONAN	15,4-20	±2x2.5% +10%	0,420	24/125/50	1.1/20/10	50	3P	Dyn11	4	Sol. 5	N/A	Sol. 1	Ak+10% A0-10%+15%	825	93	39	Yes	1350x1100x740	790	Heavy	C3H	Yes	No
GST001/1308	Spain	111067	50	ONAN	9,5-16,455	-2x5% +3x5%	0,420	24/125/50	1.1/20/10	50	3P	Yzn11 - Dzn0	4	Sol. 5	N/A	Sol. 1	Ak+10% A0-10%+15%	825	93	39	Yes	1350x1100x740	790	Heavy	C3H	Yes	No
GST001/1309	Spain	111172	100	ONAN	15,4	±2x2.5%	0,420	24/125/50	1.1/20/10	50	3P	Dyn11	4	Sol. 5	N/A	Sol. 1	Ak Ao-10%	1250	130	41	Yes	1350x1100x740	790	Heavy	C3H	Yes	No
GST001/1310	Spain	111162	100	ONAN	16	±2x2.5%	0,420	24/125/50	1.1/20/10	50	3P	Dyn11	4	Sol. 5	N/A	Sol. 1	Ak Ao-10%	1250	130	41	Yes	1350x1100x740	790	Heavy	C3H	Yes	No
GST001/1311	Spain	111117	100	ONAN	25	±2x2.5% +10%	0,420	36/170/70	1.1/20/10	50	3P	Dyn11	4,5	Sol. 5	N/A	Sol. 1	Ak+10% A0-10%+15%	1375	150	45	Yes	1350x1100x780	950	Heavy	C3H	Yes	No

GST001/1312	Spain	111093	100	ONAN	15,4-20	±2x2.5% +10%	0,420	24/125/50	1.1/20/10	50	3P	Dyn11	4	Sol. 5	N/A	Sol. 1	Ak+10% A0-10%+15%	1375	150	41	Yes	1350x1100x740	790	Heavy	C3H	Yes	No
GST001/1313	Spain	111059	100	ONAN	9,5-16,455	-2x5% +3x5%	0,420	24/125/50	1.1/20/10	50	3P	Yzn11 - Dzn0	4	Sol. 5	N/A	Sol. 1	Ak+10% A0-10%+15%	1375	150	41	Yes	1350x1100x740	790	Heavy	C3H	Yes	No
GST001/1314	Spain	111174	160	ONAN	15,4	±2x2.5%	0,420	24/125/50	1.1/20/10	50	3P	Dyn11	4	Sol. 5	N/A	Sol. 1	Ak Ao-10%	1750	189	44	Yes	1350x1200x830	1050	Heavy	C3H	Yes	No
GST001/1315	Spain	111158	160	ONAN	16	±2x2.5% +10%	0,420	24/125/50	1.1/20/10	50	3P	Dyn11	4	Sol. 5	N/A	Sol. 1	Ak Ao-10%	1750	189	44	Yes	1350x1200x830	1050	Heavy	C3H	Yes	No
GST001/1316	Spain	111163	160	ONAN	25	±2x2.5% +10%	0,420	36/170/70	1.1/20/10	50	3P	Dyn11	4,5	Sol. 5	N/A	Sol. 1	Ak+10% A0-10%+15%	1925	217	48	Yes	1350x1300x850	1200	Heavy	C3H	Yes	No
GST001/1317	Spain	111077	160	ONAN	15,4-20	±2x2.5% +10%	0,420	24/125/50	1.1/20/10	50	3P	Dyn11	4	Sol. 5	N/A	Sol. 1	Ak+10% A0-10%+15%	1925	217	44	Yes	1350x1200x830	1050	Heavy	C3H	Yes	No
GST001/1318	Spain	111057	160	ONAN	9,5-16,455	-2x5% +3x5%	0,420	24/125/50	1.1/20/10	50	3P	Yyn0-Dyn11	4	Sol. 5	N/A	Sol. 1	Ak+10% A0-10%+15%	1925	217	44	Yes	1350x1200x830	1050	Heavy	C3H	Yes	No
GST001/1502	Peru	TBD	50	ONAN	10	±2x2.5%	0,23	12/75/28	1,1/-- /3	60	3P	Dyn5	4	Sol. 1	600	Sol. 2 + Vertical Flag(DIN 43675)	Ak Ao-10%	750	81	39	No	1400x1100x900	550	Very Heavy	C5M or C4H	Yes	No
GST001/1502N	Peru	TBD	50	KNAN	10	±2x2.5%	0,23	12/75/28	1,1/-- /3	60	3P	Dyn5	4	Sol. 1	600	Sol. 2 + Vertical Flag(DIN 43675)	Ak Ao-10%	750	81	39	No	1400x1100x900	550	Very Heavy	C5M or C4H	Yes	No
GST001/1503	Peru	TBD	100	ONAN	10	±2x2.5%	0,23	12/75/28	1,1/-- /3	60	3P	Dyn5	4	Sol. 1	600	Sol. 2 + Vertical Flag(DIN 43675)	Ak Ao-10%	1250	130	41	No	1500x1100x900	650	Very Heavy	C5M or C4H	Yes	No
GST001/1503N	Peru	TBD	100	KNAN	10	±2x2.5%	0,23	12/75/28	1,1/-- /3	60	3P	Dyn5	4	Sol. 1	600	Sol. 2 + Vertical Flag(DIN 43675)	Ak Ao-10%	1250	130	41	No	1500x1100x900	650	Very Heavy	C5M or C4H	Yes	No
GST001/1504	Peru	TBD	160	ONAN	10	±2x2.5%	0,23	12/75/28	1,1/-- /3	60	3P	Dyn5	4	Sol. 1	600	Sol. 2 + Vertical Flag(DIN 43675)	Ak Ao-10%	1750	189	44	No	1600x1100x1000	1000	Very Heavy	C5M or C4H	No	No

GST001/1504N	Peru	TBD	160	KNAN	10	±2x2.5%	0,23	12/75/28	1,1/-- /3	60	3P	Dyn5	4	Sol. 1	600	Sol. 2 + Vertical Flag(DIN 43675)	Ak Ao-10%	1750	189	44	No	1600x1100x1000	1000	Very Heavy	C5M or C4H	No	No
GST001/1505	Peru	TBD	250	ONAN	10	±2x2.5%	0,23	12/75/28	1,1/-- /3	60	3P	Dyn5	4	Sol. 1	600	Sol. 3 + Vertical Flag(DIN 43675)	Ak Ao-10%	2350	270	47	Yes	1700x1100x1000	1250	Very Heavy	C5M or C4H	No	No
GST001/1505N	Peru	TBD	250	KNAN	10	±2x2.5%	0,23	12/75/28	1,1/-- /3	60	3P	Dyn5	4	Sol. 1	600	Sol. 3 + Vertical Flag(DIN 43675)	Ak Ao-10%	2350	270	47	Yes	1700x1100x1000	1250	Very Heavy	C5M or C4H	No	No
GST001/1506	Peru	TBD	400	ONAN	10	±2x2.5%	0,23	12/75/28	1,1/-- /3	60	3P	Dyn5	4	Sol. 1	600	Sol. 3 + Vertical Flag(DIN 43675)	Ak Ao-10%	3250	387	50	Yes	1700x1250x1000	1500	Very Heavy	C5M or C4H	No	No
GST001/1506N	Peru	TBD	400	KNAN	10	±2x2.5%	0,23	12/75/28	1,1/-- /3	60	3P	Dyn5	4	Sol. 1	600	Sol. 3 + Vertical Flag(DIN 43675)	Ak Ao-10%	3250	387	50	Yes	1700x1250x1000	1500	Very Heavy	C5M or C4H	No	No
GST001/1507	Peru	TBD	630	ONAN	10	±2x2.5%	0,23	12/75/28	1,1/-- /3	60	3P	Dyn5	4	Sol. 1	600	Sol. 3 + Vertical Flag(DIN 43675)	Ak Ao-10%	4600	540	57	Yes	1800x1250x1000	2000	Very Heavy	C5M or C4H	No	No
GST001/1507N	Peru	TBD	630	KNAN	10	±2x2.5%	0,23	12/75/28	1,1/-- /3	60	3P	Dyn5	4	Sol. 1	600	Sol. 3 + Vertical Flag(DIN 43675)	Ak Ao-10%	4600	540	57	Yes	1800x1250x1000	2000	Very Heavy	C5M or C4H	No	No
GST001/1509	Peru	TBD	50	ONAN	20	±2x2.5%	0,23	24/125/50	1,1/-- /3	60	3P	Dyn5	4	Sol. 1	600	Sol. 2 + Vertical Flag(DIN 43675)	Ak Ao-10%	750	81	39	No	1400x1100x900	550	Very Heavy	C5M or C4H	Yes	No
GST001/1509N	Peru	TBD	50	KNAN	20	±2x2.5%	0,23	24/125/50	1,1/-- /3	60	3P	Dyn5	4	Sol. 1	600	Sol. 2 + Vertical	Ak Ao-10%	750	81	39	No	1400x1100x900	550	Very Heavy	C5M or C4H	Yes	No

																Flag(DIN 43675)											
GST001/1510	Peru	TBD	100	ONAN	20	±2x2.5%	0,23	24/125/50	1,1/-- /3	60	3P	Dyn5	4	Sol. 1	600	Sol. 2 + Vertical Flag(DIN 43675)	Ak Ao-10%	1250	130	41	No	1500x1100x900	650	Very Heavy	C5M or C4H	Yes	No
GST001/1510N	Peru	TBD	100	KNAN	20	±2x2.5%	0,23	24/125/50	1,1/-- /3	60	3P	Dyn5	4	Sol. 1	600	Sol. 2 + Vertical Flag(DIN 43675)	Ak Ao-10%	1250	130	41	No	1500x1100x900	650	Very Heavy	C5M or C4H	Yes	No
GST001/1511	Peru	TBD	160	ONAN	20	±2x2.5%	0,23	24/125/50	1,1/-- /3	60	3P	Dyn5	4	Sol. 1	600	Sol. 2 + Vertical Flag(DIN 43675)	Ak Ao-10%	1750	189	44	No	1600x1100x1000	1000	Very Heavy	C5M or C4H	No	No
GST001/1511N	Peru	TBD	160	KNAN	20	±2x2.5%	0,23	24/125/50	1,1/-- /3	60	3P	Dyn5	4	Sol. 1	600	Sol. 2 + Vertical Flag(DIN 43675)	Ak Ao-10%	1750	189	44	No	1600x1100x1000	1000	Very Heavy	C5M or C4H	No	No
GST001/1512	Peru	TBD	250	ONAN	20	±2x2.5%	0,23	24/125/50	1,1/-- /3	60	3P	Dyn5	4	Sol. 1	600	Sol. 3 + Vertical Flag(DIN 43675)	Ak Ao-10%	2350	270	47	Yes	1700x1100x1000	1250	Very Heavy	C5M or C4H	No	No
GST001/1512N	Peru	TBD	250	KNAN	20	±2x2.5%	0,23	24/125/50	1,1/-- /3	60	3P	Dyn5	4	Sol. 1	600	Sol. 3 + Vertical Flag(DIN 43675)	Ak Ao-10%	2350	270	47	Yes	1700x1100x1000	1250	Very Heavy	C5M or C4H	No	No
GST001/1513	Peru	TBD	50	ONAN	22,9	±2x2.5%	0,23	24/125/50	1,1/-- /3	60	3P	Dyn5	4	Sol. 1	600	Sol. 2 + Vertical Flag(DIN 43675)	Ak Ao-10%	750	81	39	No	1520x1100x740	790	Very Heavy	Extra Very High	Yes	Yes
GST001/1513N	Peru	TBD	50	KNAN	22,9	±2x2.5%	0,23	24/125/50	1,1/-- /3	60	3P	Dyn5	4	Sol. 1	600	Sol. 2 + Vertical Flag(DIN 43675)	Ak Ao-10%	750	81	39	No	1520x1100x740	790	Very Heavy	Extra Very High	Yes	Yes

GST001/1514	Peru	TBD	100	ONAN	22,9	±2x2.5%	0,23	24/125/50	1,1/-- /3	60	3P	Dyn5	4	Sol. 1	600	Sol. 2 + Vertical Flag(DIN 43675)	Ak Ao-10%	1250	130	41	No	1520x1100x740	790	Very Heavy	Extra Very High	Yes	Yes
GST001/1514N	Peru	TBD	100	KNAN	22,9	±2x2.5%	0,23	24/125/50	1,1/-- /3	60	3P	Dyn5	4	Sol. 1	600	Sol. 2 + Vertical Flag(DIN 43675)	Ak Ao-10%	1250	130	41	No	1520x1100x740	790	Very Heavy	Extra Very High	Yes	Yes
GST001/1515	Peru	TBD	160	ONAN	22,9	±2x2.5%	0,23	24/125/50	1,1/-- /3	60	3P	Dyn5	4	Sol. 1	600	Sol. 2 + Vertical Flag(DIN 43675)	Ak Ao-10%	1750	189	44	No	1570x1200x830	1050	Very Heavy	Extra Very High	No	Yes
GST001/1515N	Peru	TBD	160	KNAN	22,9	±2x2.5%	0,23	24/125/50	1,1/-- /3	60	3P	Dyn5	4	Sol. 1	600	Sol. 2 + Vertical Flag(DIN 43675)	Ak Ao-10%	1750	189	44	No	1570x1200x830	1050	Very Heavy	Extra Very High	No	Yes
GST001/1516	Peru	TBD	250	ONAN	10	±2x2.5%	0,23	12/75/28	1,1/-- /3	60	3P	Dyn5	4	Sol. 5 (Type A)	N/A	Sol. 7	Ak Ao-10%	2350	270	47	Yes	1700x1400x900	1400	Very Heavy	C5M or C4H	No	No
GST001/1516N	Peru	TBD	250	KNAN	10	±2x2.5%	0,23	12/75/28	1,1/-- /3	60	3P	Dyn5	4	Sol. 5 (Type A)	N/A	Sol. 7	Ak Ao-10%	2350	270	47	Yes	1700x1400x900	1400	Very Heavy	C5M or C4H	No	No
GST001/1517	Peru	TBD	250	ONAN	20	±2x2.5%	0,23	24/125/50	1,1/-- /3	60	3P	Dyn5	4	Sol. 4	N/A	Sol. 7	Ak Ao-10%	2350	270	47	Yes	1700x1400x900	1400	Very Heavy	C5M or C4H	No	No
GST001/1517N	Peru	TBD	250	KNAN	20	±2x2.5%	0,23	24/125/50	1,1/-- /3	60	3P	Dyn5	4	Sol. 4	N/A	Sol. 7	Ak Ao-10%	2350	270	47	Yes	1700x1400x900	1400	Very Heavy	C5M or C4H	No	No
GST001/1518	Peru	TBD	400	ONAN	10	±2x2.5%	0,23	12/75/28	1,1/-- /3	60	3P	Dyn5	4	Sol. 5 (Type A)	N/A	Sol. 7	Ak Ao-10%	3250	387	50	Yes	1850x1600x1000	1950	Very Heavy	C5M or C4H	No	No
GST001/1518N	Peru	TBD	400	KNAN	10	±2x2.5%	0,23	12/75/28	1,1/-- /3	60	3P	Dyn5	4	Sol. 5 (Type A)	N/A	Sol. 7	Ak Ao-10%	3250	387	50	Yes	1850x1600x1000	1950	Very Heavy	C5M or C4H	No	No
GST001/1519	Peru	TBD	400	ONAN	20	±2x2.5%	0,23	24/125/50	1,1/-- /3	60	3P	Dyn5	4	Sol. 1	600	Sol. 3 + Vertical Flag(DIN 43675)	Ak Ao-10%	3250	387	50	Yes	1700x1250x1000	1500	Very Heavy	C5M or C4H	No	No
GST001/1519N	Peru	TBD	400	KNAN	20	±2x2.5%	0,23	24/125/50	1,1/-- /3	60	3P	Dyn5	4	Sol. 1	600	Sol. 3 + Vertical Flag(DI	Ak Ao-10%	3250	387	50	Yes	1700x1250x1000	1500	Very Heavy	C5M or C4H	No	No

																N 43675)											
GST001/1520	Peru	TBD	400	ONAN	20	±2x2.5%	0,23	24/125/50	1,1/-- /3	60	3P	Dyn5	4	Sol. 4	N/A	Sol. 7	Ak Ao-10%	3250	387	50	Yes	1850x1600x1000	1950	Very Heavy	C5M or C4H	No	No
GST001/1520N	Peru	TBD	400	KNAN	20	±2x2.5%	0,23	24/125/50	1,1/-- /3	60	3P	Dyn5	4	Sol. 4	N/A	Sol. 7	Ak Ao-10%	3250	387	50	Yes	1850x1600x1000	1950	Very Heavy	C5M or C4H	No	No
GST001/1521	Peru	TBD	630	ONAN	10	±2x2.5%	0,23	12/75/28	1,1/-- /3	60	3P	Dyn5	4	Sol. 5 (Type A)	N/A	Sol. 7	Ak Ao-10%	4600	540	52	Yes	1850x1600x1200	2500	Very Heavy	C5M or C4H	No	No
GST001/1521N	Peru	TBD	630	KNAN	10	±2x2.5%	0,23	12/75/28	1,1/-- /3	60	3P	Dyn5	4	Sol. 5 (Type A)	N/A	Sol. 7	Ak Ao-10%	4600	540	52	Yes	1850x1600x1200	2500	Very Heavy	C5M or C4H	No	No
GST001/1522	Peru	TBD	630	ONAN	20	±2x2.5%	0,23	24/125/50	1,1/-- /3	60	3P	Dyn5	4	Sol. 4	N/A	Sol. 7	Ak Ao-10%	4600	540	52	Yes	1850x1600x1200	2500	Very Heavy	C5M or C4H	No	No
GST001/1522N	Peru	TBD	630	KNAN	20	±2x2.5%	0,23	24/125/50	1,1/-- /3	60	3P	Dyn5	4	Sol. 4	N/A	Sol. 7	Ak Ao-10%	4600	540	52	Yes	1850x1600x1200	2500	Very Heavy	C5M or C4H	No	No
GST001/1601	Brazil	TBD	10	ONAN	13,8	+1x4,35% - 3x4,35%	0,22	17,5/95/38	1,1/--/3	60	2P	Ii0	2,5	Sol. 6	437,5	Sol. 8	max. value	160	40	48	No	1200x800x900	950	Very Heavy	C4H	Yes	Yes
GST001/1602	Brazil	TBD	15	ONAN	13,8	+1x4,35% - 3x4,35%	0,38-0,22	17,5/95/38	1,1/--/3	60	3P	Dyn1	3,5	Sol. 6	437,5	Sol. 8	max. value	270	60	48	No	1300x1300x750	950	Very Heavy	C4H	Yes	Yes
GST001/1604	Brazil	TBD	75	ONAN	13,8	+1x4,35% - 3x4,35%	0,38-0,22	17,5/95/38	1,1/--/3	60	3P	Dyn1	3,5	Sol. 6	437,5	Sol. 8	max. value	910	215	51	No	1300x1300x750	950	Very Heavy	C4H	Yes	Yes
GST001/1604N	Brazil	TBD	75	KNAN	13,8	+1x4,35% - 3x4,35%	0,38-0,22	17,5/95/38	1,1/--/3	60	3P	Dyn1	3,5	Sol. 6	437,5	Sol. 8	max. value	910	215	51	No	1300x1300x750	950	Very Heavy	C4H	Yes	Yes
GST001/1606	Brazil	TBD	150	ONAN	13,8	+1x4,35% - 3x4,35%	0,38-0,22	17,5/95/38	1,1/--/3	60	3P	Dyn1	3,5	Sol. 6	437,5	Sol. 8	max. value	1530	350	55	No	1300x1300x750	950	Very Heavy	C4H	Yes	Yes
GST001/1606N	Brazil	TBD	150	KNAN	13,8	+1x4,35% - 3x4,35%	0,38-0,22	17,5/95/38	1,1/--/3	60	3P	Dyn1	3,5	Sol. 6	437,5	Sol. 8	max. value	1530	350	55	No	1300x1300x750	950	Very Heavy	C4H	Yes	Yes
GST001/1607	Brazil	TBD	225	ONAN	13,8	+1x4,35% - 3x4,35%	0,38-0,22	17,5/95/38	1,1/--/3	60	3P	Dyn1	4,5	Sol. 6	437,5	Sol. 8	max. value	2160	470	55	No	1800x1600x1000	1500	Very Heavy	C4H	Yes	Yes
GST001/1608	Brazil	TBD	300	ONAN	13,8	+1x4,35% - 3x4,35%	0,38-0,22	17,5/95/38	1,1/--/3	60	3P	Dyn1	4,5	Sol. 6	437,5	Sol. 8	max. value	3440	620	55	No	1800x1600x1000	1500	Very Heavy	C4H	Yes	Yes
GST001/1608N	Brazil	TBD	300	KNAN	13,8	+1x4,35% - 3x4,35%	0,38-0,22	17,5/95/38	1,1/--/3	60	3P	Dyn1	4,5	Sol. 6	437,5	Sol. 8	max. value	2690	585	55	No	1800x1600x1000	--	Very Heavy	C4H	Yes	Yes
GST001/1609	Brazil	TBD	10	ONAN	7,967	- 2x4,35%	0,22	17,5/95/38	1,1/--/3	60	1P	Ii0	2,5	Sol. 6	280	Sol. 8	max. value	160	40	48	No	1200x800x900	950	Very Heavy	C4H	Yes	Yes
GST001/1617N	Brazil	TBD	630	KNAN	13,8	+1x4,35% - 3x4,35%	0,38-0,22	17,5/95/38	1,1/--/3	60	3P	Dyn1	4	TBD	437,5	Sol. 8	max. value	6500	1200	56	Yes	1850x1800x1030	--	Very Heavy	C4H	No	No

GST001/1718N	Colombia	TBD	5	KNAN	11,4	+/- 2 x 2,5%	0,24	17,5/125/38	1,1/-- /3	60	2P	Li0	3	Sol. 6	395	Sol. 8 Eyebolt	max. value	173	11	48	No	unrestricted	unrestricted	Medium	C3M	Yes	Yes
GST001/1719N	Colombia	TBD	5	KNAN	13,2	+/- 2 x 2,5%	0,24	17,5/125/38	1,1/-- /3	60	2P	Li0	3	Sol. 6	458	Sol. 8 Eyebolt	max. value	173	11	48	No	unrestricted	unrestricted	Medium	C3M	Yes	Yes
GST001/1720N	Colombia	TBD	5	KNAN	11,4 - 13,2	+/- 2 x 2,5%	0,24	17,5/125/38	1,1/-- /3	60	2P	Li0	3	Sol. 6	458	Sol. 8 Eyebolt	max. value	190	12	48	No	unrestricted	unrestricted	Medium	C3M	Yes	Yes
GST001/1721N	Colombia	TBD	15	KNAN	11,4	+/- 2 x 2,5%	0,24	17,5/125/38	1,1/-- /3	60	2P	Li0	3	Sol. 6	395	Sol. 8 Eyebolt	max. value	462	29	48	No	unrestricted	unrestricted	Medium	C3M	Yes	Yes
GST001/1722	Colombia	TBD	15	ONAN	13,2	+/- 2 x 2,5%	0,24	17,5/125/38	1,1/-- /3	60	2P	Li0	3	Sol. 6	458	Sol. 8 Eyebolt	max. value	462	29	48	No	unrestricted	unrestricted	Medium	C3M	Yes	Yes
GST001/1722N	Colombia	TBD	15	KNAN	13,2	+/- 2 x 2,5%	0,24	17,5/125/38	1,1/-- /3	60	2P	Li0	3	Sol. 6	458	Sol. 8 Eyebolt	max. value	462	29	48	No	unrestricted	unrestricted	Medium	C3M	Yes	Yes
GST001/1723	Colombia	TBD	15	ONAN	11,4 - 13,2	+/- 2 x 2,5%	0,24	17,5/125/38	1,1/-- /3	60	2P	Li0	3	Sol. 6	458	Sol. 8 Eyebolt	max. value	508	33	48	No	unrestricted	unrestricted	Medium	C3M	Yes	Yes
GST001/1723N	Colombia	TBD	15	KNAN	11,4 - 13,2	+/- 2 x 2,5%	0,24	17,5/125/38	1,1/-- /3	60	2P	Li0	3	Sol. 6	458	Sol. 8 Eyebolt	max. value	508	33	48	No	unrestricted	unrestricted	Medium	C3M	Yes	Yes
GST001/1724	Colombia	TBD	25	ONAN	11,4	+/- 2 x 2,5%	0,214	17,5/125/38	1,1/-- /3	60	3P	Dyn5	3	Sol. 6	395	Sol. 8 Eyebolt	max. value	600	63	48	No	unrestricted	unrestricted	Medium	C3M	Yes	Yes
GST001/1724N	Colombia	TBD	25	KNAN	11,4	+/- 2 x 2,5%	0,214	17,5/125/38	1,1/-- /3	60	3P	Dyn5	3	Sol. 6	395	Sol. 8 Eyebolt	max. value	600	63	48	No	unrestricted	unrestricted	Medium	C3M	Yes	Yes
GST001/1725	Colombia	TBD	25	ONAN	13,2	+/- 2 x 2,5%	0,214	17,5/125/38	1,1/-- /3	60	3P	Dyn5	3	Sol. 6	458	Sol. 8 Eyebolt	max. value	600	63	48	No	unrestricted	unrestricted	Medium	C3M	Yes	Yes
GST001/1725N	Colombia	TBD	25	KNAN	13,2	+/- 2 x 2,5%	0,214	17,5/125/38	1,1/-- /3	60	3P	Dyn5	3	Sol. 6	458	Sol. 8 Eyebolt	max. value	600	63	48	No	unrestricted	unrestricted	Medium	C3M	Yes	Yes
GST001/1726	Colombia	TBD	25	ONAN	11,4 - 13,2	+/- 2 x 2,5%	0,214	17,5/125/38	1,1/-- /3	60	3P	Dyn5	3	Sol. 6	458	Sol. 8 Eyebolt	max. value	660	72	48	No	unrestricted	unrestricted	Medium	C3M	Yes	Yes
GST001/1726N	Colombia	TBD	25	KNAN	11,4 - 13,2	+/- 2 x 2,5%	0,214	17,5/125/38	1,1/-- /3	60	3P	Dyn5	3	Sol. 6	458	Sol. 8 Eyebolt	max. value	660	72	48	No	unrestricted	unrestricted	Medium	C3M	Yes	Yes
GST001/1727	Colombia	TBD	50	ONAN	11,4	+/- 2 x 2,5%	0,214	17,5/125/38	1,1/-- /3	60	3P	Dyn5	3	Sol. 6	395	Sol. 8 Eyebolt	max. value	750	81	48	No	unrestricted	unrestricted	Medium	C3M	Yes	Yes
GST001/1727N	Colombia	TBD	50	KNAN	11,4	+/- 2 x 2,5%	0,214	17,5/125/38	1,1/-- /3	60	3P	Dyn5	3	Sol. 6	395	Sol. 8 Eyebolt	max. value	750	81	48	No	unrestricted	unrestricted	Medium	C3M	Yes	Yes
GST001/1728	Colombia	TBD	50	ONAN	13,2	+/- 2 x 2,5%	0,214	17,5/125/38	1,1/-- /3	60	3P	Dyn5	3	Sol. 6	458	Sol. 8 Eyebolt	max. value	750	81	48	No	unrestricted	unrestricted	Medium	C3M	Yes	Yes
GST001/1728N	Colombia	TBD	50	KNAN	13,2	+/- 2 x 2,5%	0,214	17,5/125/38	1,1/-- /3	60	3P	Dyn5	3	Sol. 6	458	Sol. 8 Eyebolt	max. value	750	81	48	No	unrestricted	unrestricted	Medium	C3M	Yes	Yes

GST001/1729	Colombia	TBD	50	ONAN	11,4 - 13,2	+/- 2 x 2,5%	0,214	17,5/125/38	1,1/-- /3	60	3P	Dyn5	3	Sol. 6	458	Sol. 8 Eyebolt	max. value	825	93	48	No	unrestricted	unrestricted	Medium	C3M	Yes	Yes
GST001/1729N	Colombia	TBD	50	KNAN	11,4 - 13,2	+/- 2 x 2,5%	0,214	17,5/125/38	1,1/-- /3	60	3P	Dyn5	3	Sol. 6	458	Sol. 8 Eyebolt	max. value	825	93	48	No	unrestricted	unrestricted	Medium	C3M	Yes	Yes
GST001/1730	Colombia	TBD	75	ONAN	11,4	+/- 2 x 2,5%	0,214	17,5/125/38	1,1/-- /3	60	3P	Dyn5	3,5	Sol. 6	395	Sol. 8 Spade H	max. value	1000	106	51	No	unrestricted	unrestricted	Medium	C3M	Yes	Yes
GST001/1730N	Colombia	TBD	75	KNAN	11,4	+/- 2 x 2,5%	0,214	17,5/125/38	1,1/-- /3	60	3P	Dyn5	3,5	Sol. 6	395	Sol. 8 Spade H	max. value	1000	106	51	No	unrestricted	unrestricted	Medium	C3M	Yes	Yes
GST001/1731	Colombia	TBD	75	ONAN	13,2	+/- 2 x 2,5%	0,214	17,5/125/38	1,1/-- /3	60	3P	Dyn5	3,5	Sol. 6	458	Sol. 8 Spade H	max. value	1000	106	51	No	unrestricted	unrestricted	Medium	C3M	Yes	Yes
GST001/1731N	Colombia	TBD	75	KNAN	13,2	+/- 2 x 2,5%	0,214	17,5/125/38	1,1/-- /3	60	3P	Dyn5	3,5	Sol. 6	458	Sol. 8 Spade H	max. value	1000	106	51	No	unrestricted	unrestricted	Medium	C3M	Yes	Yes
GST001/1732	Colombia	TBD	75	ONAN	11,4 - 13,2	+/- 2 x 2,5%	0,214	17,5/125/38	1,1/-- /3	60	3P	Dyn5	3,5	Sol. 6	458	Sol. 8 Spade H	max. value	1100	121	51	No	unrestricted	unrestricted	Medium	C3M	Yes	Yes
GST001/1732N	Colombia	TBD	75	KNAN	11,4 - 13,2	+/- 2 x 2,5%	0,214	17,5/125/38	1,1/-- /3	60	3P	Dyn5	3,5	Sol. 6	458	Sol. 8 Spade H	max. value	1100	121	51	No	unrestricted	unrestricted	Medium	C3M	Yes	Yes
GST001/1733	Colombia	TBD	100	ONAN	11,4	+/- 2 x 2,5%	0,214	17,5/125/38	1,1/-- /3	60	3P	Dyn5	3,5	Sol. 6	395	Sol. 8 Spade H	max. value	1250	130	51	No	unrestricted	unrestricted	Medium	C3M	Yes	Yes
GST001/1733N	Colombia	TBD	100	KNAN	11,4	+/- 2 x 2,5%	0,214	17,5/125/38	1,1/-- /3	60	3P	Dyn5	3,5	Sol. 6	395	Sol. 8 Spade H	max. value	1250	130	51	No	unrestricted	unrestricted	Medium	C3M	Yes	Yes
GST001/1734	Colombia	TBD	100	ONAN	13,2	+/- 2 x 2,5%	0,214	17,5/125/38	1,1/-- /3	60	3P	Dyn5	3,5	Sol. 6	458	Sol. 8 Spade H	max. value	1250	130	51	No	unrestricted	unrestricted	Medium	C3M	Yes	Yes
GST001/1734N	Colombia	TBD	100	KNAN	13,2	+/- 2 x 2,5%	0,214	17,5/125/38	1,1/-- /3	60	3P	Dyn5	3,5	Sol. 6	458	Sol. 8 Spade H	max. value	1250	130	51	No	unrestricted	unrestricted	Medium	C3M	Yes	Yes
GST001/1735	Colombia	TBD	100	ONAN	11,4 - 13,2	+/- 2 x 2,5%	0,214	17,5/125/38	1,1/-- /3	60	3P	Dyn5	3,5	Sol. 6	458	Sol. 8 Spade H	max. value	1375	150	51	No	unrestricted	unrestricted	Medium	C3M	Yes	Yes
GST001/1735N	Colombia	TBD	100	KNAN	11,4 - 13,2	+/- 2 x 2,5%	0,214	17,5/125/38	1,1/-- /3	60	3P	Dyn5	3,5	Sol. 6	458	Sol. 8 Spade H	max. value	1375	150	51	No	unrestricted	unrestricted	Medium	C3M	Yes	Yes
GST001/1736	Colombia	TBD	150	ONAN	11,4	+/- 2 x 2,5%	0,214	17,5/125/38	1,1/-- /3	60	3P	Dyn5	4	Sol. 5	395	Sol. 8	max. value	1667	179	55	Yes	1020X1300X880	unrestricted	Medium	C3M	No	No
GST001/1736N	Colombia	TBD	150	KNAN	11,4	+/- 2 x 2,5%	0,214	17,5/125/38	1,1/-- /3	60	3P	Dyn5	4	Sol. 5	395	Sol. 8	max. value	1667	179	55	Yes	1020X1300X880	unrestricted	Medium	C3M	No	No
GST001/1737	Colombia	TBD	160	ONAN	11,4	+/- 2 x 2,5%	0,214	17,5/125/38	1,1/-- /3	60	3P	Dyn5	4	Sol. 6	395	Sol. 8 Spade H	max. value	1750	189	55	No	Max. L 1,8 m	700	Medium	C3M	Yes	Yes
GST001/1737N	Colombia	TBD	160	KNAN	11,4	+/- 2 x 2,5%	0,214	17,5/125/38	1,1/-- /3	60	3P	Dyn5	4	Sol. 6	395	Sol. 8 Spade H	max. value	1750	189	55	No	Max. L 1,8 m	700	Medium	C3M	Yes	Yes

GST001/1738	Colombia	TBD	160	ONAN	13,2	+/- 2 x 2,5%	0,214	17,5/125/38	1,1/-- /3	60	3P	Dyn5	4	Sol. 6	458	Sol. 8 Spade H	max. value	1750	189	55	No	Max. L 1,8 m	700	Medium	C3M	Yes	Yes
GST001/1738N	Colombia	TBD	160	KNAN	13,2	+/- 2 x 2,5%	0,214	17,5/125/38	1,1/-- /3	60	3P	Dyn5	4	Sol. 6	458	Sol. 8 Spade H	max. value	1750	189	55	No	Max. L 1,8 m	700	Medium	C3M	Yes	Yes
GST001/1739	Colombia	TBD	160	ONAN	11,4 - 13,2	+/- 2 x 2,5%	0,214	17,5/125/38	1,1/-- /3	60	3P	Dyn5	4	Sol. 6	458	Sol. 8 Spade H	max. value	1925	217	55	No	Max. L 1,8 m	700	Medium	C3M	Yes	Yes
GST001/1739N	Colombia	TBD	160	KNAN	11,4 - 13,2	+/- 2 x 2,5%	0,214	17,5/125/38	1,1/-- /3	60	3P	Dyn5	4	Sol. 6	458	Sol. 8 Spade H	max. value	1925	217	55	No	Max. L 1,8 m	700	Medium	C3M	Yes	Yes
GST001/1740	Colombia	TBD	160	ONAN	34,5	+/- 2 x 2,5%	0,214	36/200/38	1,1/-- /3	60	3P	Dyn5	4	Sol. 6	1197	Sol. 8 Spade H	max. value	1925	217	55	No	Max. L 1,8 m	700	Medium	C3M	Yes	Yes
GST001/1740N	Colombia	TBD	160	KNAN	34,5	+/- 2 x 2,5%	0,214	36/200/38	1,1/-- /3	60	3P	Dyn5	4	Sol. 6	1197	Sol. 8 Spade H	max. value	1925	217	55	No	Max. L 1,8 m	700	Medium	C3M	Yes	Yes
GST001/1741	Colombia	TBD	225	ONAN	11,4	+/- 2 x 2,5%	0,214	17,5/125/38	1,1/-- /3	60	3P	Dyn5	4	Sol. 5	395	Sol. 8	max. value	2183	248	55	Yes	1020X1300X880	unrestricted	Medium	C3M	No	No
GST001/1741N	Colombia	TBD	225	KNAN	11,4	+/- 2 x 2,5%	0,214	17,5/125/38	1,1/-- /3	60	3P	Dyn5	4	Sol. 5	395	Sol. 8	max. value	2183	248	55	Yes	1020X1300X880	unrestricted	Medium	C3M	No	No
GST001/1742	Colombia	TBD	250	ONAN	11,4	+/- 2 x 2,5%	0,214	17,5/125/38	1,1/-- /3	60	3P	Dyn5	4	Sol. 6	395	Sol. 8 Spade H	max. value	2350	270	55	No	Max. L 1,8 m	unrestricted	Medium	C3M	No	Yes
GST001/1742N	Colombia	TBD	250	KNAN	11,4	+/- 2 x 2,5%	0,214	17,5/125/38	1,1/-- /3	60	3P	Dyn5	4	Sol. 6	395	Sol. 8 Spade H	max. value	2350	270	55	No	Max. L 1,8 m	unrestricted	Medium	C3M	No	Yes
GST001/1743	Colombia	TBD	250	ONAN	11,4 - 13,2	+/- 2 x 2,5%	0,214	17,5/125/38	1,1/-- /3	60	3P	Dyn5	4	Sol. 6	458	Sol. 8 Spade H	max. value	2585	311	55	No	Max. L 1,8 m	unrestricted	Medium	C3M	No	Yes
GST001/1743N	Colombia	TBD	250	KNAN	11,4 - 13,2	+/- 2 x 2,5%	0,214	17,5/125/38	1,1/-- /3	60	3P	Dyn5	4	Sol. 6	458	Sol. 8 Spade H	max. value	2585	311	55	No	Max. L 1,8 m	unrestricted	Medium	C3M	No	Yes
GST001/1744	Colombia	TBD	400	ONAN	11,4	+/- 2 x 2,5%	0,214	17,5/125/38	1,1/-- /3	60	3P	Dyn5	4,5	Sol. 6	395	Sol. 8 Spade H	max. value	3250	387	56	Yes	unrestricted	unrestricted	Medium	C3M	No	Yes
GST001/1744N	Colombia	TBD	400	KNAN	11,4	+/- 2 x 2,5%	0,214	17,5/125/38	1,1/-- /3	60	3P	Dyn5	4,5	Sol. 6	395	Sol. 8 Spade H	max. value	3250	387	56	Yes	unrestricted	unrestricted	Medium	C3M	No	Yes
GST001/1745	Colombia	TBD	400	ONAN	11,4 - 13,2	+/- 2 x 2,5%	0,214	17,5/125/38	1,1/-- /3	60	3P	Dyn5	4,5	Sol. 6	458	Sol. 8 Spade H	max. value	3575	445	56	Yes	unrestricted	unrestricted	Medium	C3M	No	Yes
GST001/1745N	Colombia	TBD	400	KNAN	11,4 - 13,2	+/- 2 x 2,5%	0,214	17,5/125/38	1,1/-- /3	60	3P	Dyn5	4,5	Sol. 6	458	Sol. 8 Spade H	max. value	3575	445	56	Yes	unrestricted	unrestricted	Medium	C3M	No	Yes
GST001/1746	Colombia	TBD	400	ONAN	11,4	+/- 2 x 2,5%	0,214	17,5/125/38	1,1/-- /3	60	3P	Dyn5	4,5	Sol. 5	395	Sol. 7	max. value	3250	387	55	Yes	1501x1696x990	unrestricted	Medium	C3M	No	No
GST001/1746N	Colombia	TBD	400	KNAN	11,4	+/- 2 x 2,5%	0,214	17,5/125/38	1,1/-- /3	60	3P	Dyn5	4,5	Sol. 5	395	Sol. 7	max. value	3250	387	55	Yes	1501x1696x990	unrestricted	Medium	C3M	No	No

GST001/1747	Colombia	TBD	500	ONAN	11,4 - 13,2	+/- 2 x 2,5%	0,214	17,5/125/38	1,1/-- /3	60	3P	Dyn5	5	Sol. 6	458	Sol. 8 Bus Bar	max. value	4290	528	56	Yes	unrestricted	unrestricted	Medium	C3M	No	Yes
GST001/1747N	Colombia	TBD	500	KNAN	11,4 - 13,2	+/- 2 x 2,5%	0,214	17,5/125/38	1,1/-- /3	60	3P	Dyn5	5	Sol. 6	458	Sol. 8 Bus Bar	max. value	4290	528	56	Yes	unrestricted	unrestricted	Medium	C3M	No	Yes
GST001/1748	Colombia	TBD	630	ONAN	11,4 - 13,2	+/- 2 x 2,5%	0,214	17,5/125/38	1,1/-- /3	60	3P	Dyn5	5	Sol. 6	458	Sol. 8 Bus Bar	max. value	5060	621	57	Yes	unrestricted	unrestricted	Medium	C3M	No	Yes
GST001/1748N	Colombia	TBD	630	KNAN	11,4 - 13,2	+/- 2 x 2,5%	0,214	17,5/125/38	1,1/-- /3	60	3P	Dyn5	5	Sol. 6	458	Sol. 8 Bus Bar	max. value	5060	621	57	Yes	unrestricted	unrestricted	Medium	C3M	No	Yes
GST001/1749	Colombia	TBD	1000	ONAN	11,4 - 13,2	+/- 2 x 2,5%	0,214	17,5/125/38	1,1/-- /3	60	3P	Dyn5	5	Sol. 6	458	Sol. 8 Bus Bar	max. value	8360	797	58	Yes	unrestricted	unrestricted	Medium	C3M	No	Yes
GST001/1749N	Colombia	TBD	1000	KNAN	11,4 - 13,2	+/- 2 x 2,5%	0,214	17,5/125/38	1,1/-- /3	60	3P	Dyn5	5	Sol. 6	458	Sol. 8 Bus Bar	max. value	8360	797	58	Yes	unrestricted	unrestricted	Medium	C3M	No	Yes
GST001/1839	Chile	TBD	50	ONAN	12	±2x2.5%	0,400	17,5/95/38	1.1/20/10	50	3P	Dyn1	4	Sol. 6	350	Sol. 8	Max. Value	750	81	48	No	1150X1300X1200	<550	Heavy	C3H	Yes	Yes
GST001/1839N	Chile	TBD	50	KNAN	12	±2x2.5%	0,400	17,5/95/38	1.1/20/10	50	3P	Dyn1	4	Sol. 6	350	Sol. 8	Max. Value	750	81	48	No	1150X1300X1200	<550	Heavy	C3H	Yes	Yes
GST001/1840	Chile	TBD	50	ONAN	23	±2x2.5%	0,400	36/170/70	1.1/20/10	50	3P	Dyn1	4	Sol. 6	490	Sol. 8	Max. Value	825	93	48	No	1150X1300X1200	<550	Heavy	C3H	Yes	Yes
GST001/1840N	Chile	TBD	50	KNAN	23	±2x2.5%	0,400	36/170/70	1.1/20/10	50	3P	Dyn1	4	Sol. 6	490	Sol. 8	Max. Value	825	93	48	No	1150X1300X1200	<550	Heavy	C3H	Yes	Yes
GST001/1841	Chile	TBD	100	ONAN	12	±2x2.5%	0,400	17,5/95/38	1.1/20/10	50	3P	Dyn1	4	Sol. 6	350	Sol. 8	Max. Value	1250	130	51	No	1520x1100x740	<1900	Heavy	C3H	Yes	Yes
GST001/1841N	Chile	TBD	100	KNAN	12	±2x2.5%	0,400	17,5/95/38	1.1/20/10	50	3P	Dyn1	4	Sol. 6	350	Sol. 8	Max. Value	1250	130	51	No	1520x1100x740	<1900	Heavy	C3H	Yes	Yes
GST001/1842	Chile	TBD	100	ONAN	23	±2x2.5%	0,400	36/170/70	1.1/20/10	50	3P	Dyn1	4	Sol. 6	490	Sol. 8	Max. Value	1375	150	51	No	1520x1100x740	<1900	Heavy	C3H	Yes	Yes
GST001/1842N	Chile	TBD	100	KNAN	23	±2x2.5%	0,400	36/170/70	1.1/20/10	50	3P	Dyn1	4	Sol. 6	490	Sol. 8	Max. Value	1375	150	51	No	1520x1100x740	<1900	Heavy	C3H	Yes	Yes
GST001/1843	Chile	TBD	160	ONAN	12	±2x2.5%	0,400	17,5/95/38	1.1/20/10	50	3P	Dyn1	4	Sol. 6	350	Sol. 8	Max. Value	1750	189	55	No	1800x1600x1400	<1900	Heavy	C3H	Yes	Yes
GST001/1843N	Chile	TBD	160	KNAN	12	±2x2.5%	0,400	17,5/95/38	1.1/20/10	50	3P	Dyn1	4	Sol. 6	350	Sol. 8	Max. Value	1750	189	55	No	1800x1600x1400	<1900	Heavy	C3H	Yes	Yes
GST001/1844	Chile	TBD	160	ONAN	23	±2x2.5%	0,400	36/170/70	1.1/20/10	50	3P	Dyn1	4	Sol. 6	490	Sol. 8	Max. Value	1925	217	55	No	1800x1600x1400	<1900	Heavy	C3H	Yes	Yes
GST001/1844N	Chile	TBD	160	KNAN	23	±2x2.5%	0,400	36/170/70	1.1/20/10	50	3P	Dyn1	4	Sol. 6	490	Sol. 8	Max. Value	1925	217	55	No	1800x1600x1400	<1900	Heavy	C3H	Yes	Yes

GST001/1845	Chile	TBD	250	ONAN	12	±2x2.5%	0,400	17,5/95/38	1.1/20/10	50	3P	Dyn1	4	Sol. 6	350	Sol. 8	Max. Value	2350	270	55	No	1800x1600x1400	<1900	Heavy	C3H	Yes	Yes
GST001/1845N	Chile	TBD	250	KNAN	12	±2x2.5%	0,400	17,5/95/38	1.1/20/10	50	3P	Dyn1	4	Sol. 6	350	Sol. 8	Max. Value	2350	270	55	No	1800x1600x1400	<1900	Heavy	C3H	Yes	Yes
GST001/1846	Chile	TBD	250	ONAN	23	±2x2.5%	0,400	36/170/70	1.1/20/10	50	3P	Dyn1	4	Sol. 6	490	Sol. 8	Max. Value	2585	311	55	No	1800x1600x1400	<1900	Heavy	C3H	Yes	Yes
GST001/1846N	Chile	TBD	250	KNAN	23	±2x2.5%	0,400	36/170/70	1.1/20/10	50	3P	Dyn1	4	Sol. 6	490	Sol. 8	Max. Value	2585	311	55	No	1800x1600x1400	<1900	Heavy	C3H	Yes	Yes
GST001/1847	Chile	TBD	400	ONAN	12	±2x2.5%	0,400	17,5/95/38	1.1/20/10	50	3P	Dyn1	4	Sol. 6	350	Sol. 8	Max. Value	3250	387	56	No	1800x1600x1400	<1900	Heavy	C3H	Yes	Yes
GST001/1847N	Chile	TBD	400	KNAN	12	±2x2.5%	0,400	17,5/95/38	1.1/20/10	50	3P	Dyn1	4	Sol. 6	350	Sol. 8	Max. Value	3250	387	56	No	1800x1600x1400	<1900	Heavy	C3H	Yes	Yes
GST001/1848	Chile	TBD	400	ONAN	12	±2x2.5%	0,400	24/125/50	1.1/20/10	50	3P	Dyn1	4	Sol. 5	N/A	Sol. 6	Max. Value	3250	387	56	Yes	1300x1600x1000	<1500	Heavy	C3H	No	Yes
GST001/1848N	Chile	TBD	400	KNAN	12	±2x2.5%	0,400	24/125/50	1.1/20/10	50	3P	Dyn1	4	Sol. 5	N/A	Sol. 6	Max. Value	3250	387	56	Yes	1300x1600x1000	<1500	Heavy	C3H	No	Yes
GST001/1849	Chile	TBD	400	ONAN	23	±2x2.5%	0,400	36/170/70	1.1/20/10	50	3P	Dyn1	4	Sol. 6	490	Sol. 8	Max. Value	3575	445	56	No	1800x1600x1400	<1900	Heavy	C3H	Yes	Yes
GST001/1849N	Chile	TBD	400	KNAN	23	±2x2.5%	0,400	36/170/70	1.1/20/10	50	3P	Dyn1	4	Sol. 6	490	Sol. 8	Max. Value	3575	445	56	No	1800x1600x1400	<1900	Heavy	C3H	Yes	Yes
GST001/1850	Chile	TBD	400	ONAN	23	±2x2.5%	0,400	36/170/70	1.1/20/10	50	3P	Dyn1	4	Sol. 5	N/A	Sol. 6	Max. Value	3575	445	56	Yes	1300x1600x1000	<1500	Heavy	C3H	No	Yes
GST001/1850N	Chile	TBD	400	KNAN	23	±2x2.5%	0,400	36/170/70	1.1/20/10	50	3P	Dyn1	4	Sol. 5	N/A	Sol. 6	Max. Value	3575	445	56	Yes	1300x1600x1000	<1500	Heavy	C3H	No	Yes
GST001/1851	Chile	TBD	630	ONAN	12	±2x2.5%	0,400	24/125/50	1.1/20/10	50	3P	Dyn1	4	Sol. 5	N/A	Sol. 6	Max. Value	4600	540	56	Yes	1500x1650x1000	<1750	Heavy	C3H	No	Yes
GST001/1851N	Chile	TBD	630	KNAN	12	±2x2.5%	0,400	24/125/50	1.1/20/10	50	3P	Dyn1	4	Sol. 5	N/A	Sol. 6	Max. Value	4600	540	56	Yes	1500x1650x1000	<1750	Heavy	C3H	No	Yes
GST001/1852	Chile	TBD	630	ONAN	23	±2x2.5%	0,400	36/170/70	1.1/20/10	50	3P	Dyn1	4	Sol. 5	N/A	Sol. 6	Max. Value	5060	621	56	Yes	1500x1650x1000	<1750	Heavy	C3H	No	Yes
GST001/1852N	Chile	TBD	630	KNAN	23	±2x2.5%	0,400	36/170/70	1.1/20/10	50	3P	Dyn1	4	Sol. 5	N/A	Sol. 6	Max. Value	5060	621	56	Yes	1500x1650x1000	<1750	Heavy	C3H	No	Yes
GST001/1853	Chile	TBD	800	ONAN	12	±2x2.5%	0,400	24/125/50	1.1/20/10	50	3P	Dyn1	5	Sol. 5	N/A	Sol. 6	Max. Value	6000	585	56	Yes	1500x1900x1100	<2200	Heavy	C3H	No	Yes
GST001/1853N	Chile	TBD	800	KNAN	12	±2x2.5%	0,400	24/125/50	1.1/20/10	50	3P	Dyn1	5	Sol. 5	N/A	Sol. 6	Max. Value	6000	585	56	Yes	1500x1900x1100	<2200	Heavy	C3H	No	Yes

GST001/1854	Chile	TBD	800	ONAN	23	±2x2.5%	0,400	36/170/70	1.1/20/10	50	3P	Dyn1	5	Sol. 5	N/A	Sol. 6	Max. Value	6600	673	56	Yes	1500x1900x1100	<2200	Heavy	C3H	No	Yes
GST001/1854N	Chile	TBD	800	KNAN	23	±2x2.5%	0,400	36/170/70	1.1/20/10	50	3P	Dyn1	5	Sol. 5	N/A	Sol. 6	Max. Value	6600	673	56	Yes	1500x1900x1100	<2200	Heavy	C3H	No	Yes
GST001/1855	Chile	TBD	1000	ONAN	12	±2x2.5%	0,400	24/125/50	1.1/20/10	50	3P	Dyn1	5	Sol. 5	N/A	Sol. 6	Max. Value	7600	693	56	Yes	2000x2050x1200	<2400	Heavy	C3H	No	Yes
GST001/1855N	Chile	TBD	1000	KNAN	12	±2x2.5%	0,400	24/125/50	1.1/20/10	50	3P	Dyn1	5	Sol. 5	N/A	Sol. 6	Max. Value	7600	693	56	Yes	2000x2050x1200	<2400	Heavy	C3H	No	Yes
GST001/1856	Chile	TBD	1000	ONAN	23	±2x2.5%	0,400	36/170/70	1.1/20/10	50	3P	Dyn1	5	Sol. 5	N/A	Sol. 6	Max. Value	8360	797	56	Yes	2000x2050x1200	<2400	Heavy	C3H	No	Yes
GST001/1856N	Chile	TBD	1000	KNAN	23	±2x2.5%	0,400	36/170/70	1.1/20/10	50	3P	Dyn1	5	Sol. 5	N/A	Sol. 6	Max. Value	8360	797	56	Yes	2000x2050x1200	<2400	Heavy	C3H	No	Yes
GST001/1903	Brazil	TBD	15	ONAN	7,967	- 4x4,35%	0,24-0,12	17,5/95/38	1,1/--/3	60	1P	Ii0	3,5	Sol. 6	280	Sol. 8	max. value	220	50	48	No	1200x800x900	750	Very Heavy	C4H	Yes	Yes
GST001/1904	Brazil	TBD	15	ONAN	13,8	- 4x4,35%	0,24-0,12	17,5/95/38	1,1/--/3	60	2P	Ii0	3,5	Sol. 6	437,5	Sol. 8	max. value	220	50	48	No	1200x800x900	750	Very Heavy	C4H	Yes	Yes
GST001/1905	Brazil	TBD	30	ONAN	13,8	- 4x4,35%	0,22-0,127	17,5/95/38	1,1/--/3	60	3P	Dyn1	3,5	Sol. 6	437,5	Sol. 8	max. value	450	110	48	No	1300x1300x750	750	Very Heavy	C4H	Yes	Yes
GST001/1905	Brazil	TBD	30	ONAN	13,8	- 4x4,35%	0,22-0,127	17,5/95/38	1,1/--/3	60	3P	Dyn1	3,5	Sol. 6	437,5	Sol. 8	max. value	450	110	48	No	1300x1300x750	750	Very Heavy	C4H	Yes	Yes
GST001/1907	Brazil	TBD	75	ONAN	13,8	- 4x4,35%	0,22-0,127	17,5/95/38	1,1/--/3	60	3P	Dyn1	3,5	Sol. 6	437,5	Sol. 8	max. value	910	215	51	No	1300x1350x950	750	Very Heavy	C4H	Yes	Yes
GST001/1907	Brazil	TBD	75	ONAN	13,8	- 4x4,35%	0,22-0,127	17,5/95/38	1,1/--/3	60	3P	Dyn1	3,5	Sol. 6	437,5	Sol. 8	max. value	910	215	51	No	1300x1350x950	750	Very Heavy	C4H	Yes	Yes
GST001/1908	Brazil	TBD	150	ONAN	13,8	- 4x4,35%	0,22-0,127	17,5/95/38	1,1/--/3	60	3P	Dyn1	3,5	Sol. 6	437,5	Sol. 8	max. value	1530	350	55	No	1300x1350x950	750	Very Heavy	C4H	Yes	Yes
GST001/1908	Brazil	TBD	150	ONAN	13,8	- 4x4,35%	0,22-0,127	17,5/95/38	1,1/--/3	60	3P	Dyn1	3,5	Sol. 6	437,5	Sol. 8	max. value	1530	350	55	No	1300x1350x950	750	Very Heavy	C4H	Yes	Yes
GST001/1909	Brazil	TBD	300	ONAN	13,8	- 4x4,35%	0,22-0,127	17,5/95/38	1,1/--/3	60	3P	Dyn1	4,5	Sol. 6	437,5	Sol. 8	max. value	2690	585	55	No	1800x1650x1150	1200	Very Heavy	C4H	Yes	Yes
GST001/1909	Brazil	TBD	300	ONAN	13,8	- 4x4,35%	0,22-0,127	17,5/95/38	1,1/--/3	60	3P	Dyn1	4,5	Sol. 6	437,5	Sol. 8	max. value	2690	585	55	No	1800x1650x1150	1200	Very Heavy	C4H	Yes	Yes
GST001/1921	Brazil	TBD	225	ONAN	23,1 (Group O)	1+ 2 x - 4,76%	0,22-0,127	24/125/50	1,1/--/3	60	3P	Dyn1	5	Sol. 6	450	Sol.8	Max. Value	2240	530	55	No	2000x1700x1200	1500	Heavy	C3H	Yes	Yes
GST001/1922	Brazil	TBD	150	ONAN	23,1 (Group O)	1+ 2 x - 4,76%	0,22-0,127	24/125/50	1,1/--/3	60	3P	Dyn1	4	Sol. 6	450	Sol.8	Max. Value	1630	380	55	No	1600x1450x950	950	Heavy	C3H	Yes	Yes

GST001/1924	Brazil	TBD	75	ONAN	23,1 (Group O)	1+ 2 x - 4,76%	0,22-0,127	24/125/50	1,1/--/3	60	3P	Dyn1	4	Sol. 6	450	Sol.8	Max. Value	970	230	51	No	1600x1450x950	950	Heavy	C3H	Yes	Yes
GST001/1926	Brazil	TBD	30	ONAN	23,1 (Group O)	1+ 2 x - 4,76%	0,22-0,127	24/125/50	1,1/--/3	60	3P	Dyn1	4	Sol. 6	450	Sol.8	Max. Value	475	115	48	No	1600x1400x900	950	Heavy	C3H	Yes	Yes
GST001/1932	Brazil	TBD	100	ONAN	13,972 (Group I)	1+2x-4,54%	0,24-0,12	15/95/34	1,1/--/3	60	1P	Subtractive	2,5	Sol. 6	280	Sol.8	Max. Value	985	205	51	No	1700x900x1000	950	Heavy	C3H	Yes	Yes
GST001/1933	Brazil	TBD	50	ONAN	13,972 (Group I)	1+2x-4,54%	0,24-0,12	15/95/34	1,1/--/3	60	1P	Subtractive	2,5	Sol. 6	280	Sol.8	Max. Value	510	130	48	No	1700x900x1000	950	Heavy	C3H	Yes	Yes
GST001/1934	Brazil	TBD	25	ONAN	13,972 (Group I)	1+2x-4,54%	0,24-0,12	15/95/34	1,1/--/3	60	1P	Subtractive	2,5	Sol. 6	280	Sol.8	Max. Value	325	70	48	No	1300x800x900	950	Heavy	C3H	Yes	Yes
GST001/1936	Brazil	TBD	25	ONAN	7,967 (Group G)	1+ 2x - 4,35%	0,24-0,12	15/95/34	1,1/--/3	60	1P	Additive	2,5	Sol. 6	280	Sol.8	Max. Value	325	70	48	No	1200x800x900	950	Heavy	C3H	Yes	Yes
GST001/1937	Brazil	TBD	25	ONAN	7,967-2,320 (Group H)	1+ 2x - 4,35% (7,967) / 1+ 2x - 4,74% (2,320)	0,24-0,12	15/95/34	1,1/--/3	60	1P	Additive	2,5	Sol. 6	280	Sol.8	Max. Value	325	70	48	No	1200x800x900	950	Heavy	C3H	Yes	Yes
GST001/1938	Brazil	TBD	50	ONAN	7,967 (Group G)	1+ 2x - 4,35%	0,24-0,12	15/95/34	1,1/--/3	60	1P	Additive	2,5	Sol. 6	280	Sol.8	Max. Value	510	130	48	No	1400x900x1000	950	Heavy	C3H	Yes	Yes
GST001/1939	Brazil	TBD	50	ONAN	7,967-2,320 (Group H)	1+ 2x - 4,35% (7,967) / 1+ 2x - 4,74% (2,320)	0,24-0,12	15/95/34	1,1/--/3	60	1P	Additive	2,5	Sol. 6	280	Sol.8	Max. Value	510	130	48	No	1400x900x1000	950	Heavy	C3H	Yes	Yes
GST001/1941	Brazil	TBD	75	ONAN	13,8-3,98 (Group M/L)	1+ 2x - 4,35%(13,8) / 1+ 2x- 5,01%(3,98)	0,22-0,127	15/95/34	1,1/--/3	60	3P	Dyn1	3,5	Sol. 6	280	Sol.8	Max. Value	910	215	51	No	1300x1350x950	950	Heavy	C3H	Yes	Yes
GST001/1942	Brazil	TBD	100	ONAN	7,967 (Group G)	1+ 2x - 4,35%	0,24-0,12	15/95/34	1,1/--/3	60	1P	Additive	2,5	Sol. 6	280	Sol.8	Max. Value	985	205	51	No	1400x900x1000	950	Heavy	C3H	Yes	Yes
GST001/1943	Brazil	TBD	100	ONAN	7,967-2,320 (Group H)	1+ 2x - 4,35% (7,967) / 1+ 2x - 4,74% (2,320)	0,24-0,12	15/95/34	1,1/--/3	60	1P	Additive	2,5	Sol. 6	280	Sol.8	Max. Value	985	205	51	No	1400x900x1000	950	Heavy	C3H	Yes	Yes
GST001/1947	Brazil	TBD	150	ONAN	13,8-3,98 (Group M/L)	1+ 2x - 4,35%(13,8) / 1+ 2x- 5,01%(3,98)	0,22-0,127	15/95/34	1,1/--/3	60	3P	Dyn1	3,5	Sol. 6	280	Sol.8	Max. Value	1530	350	55	No	1300x1350x950	950	Heavy	C3H	Yes	Yes
GST001/1948	Brazil	TBD	225	ONAN	13,8 (Group M)	1+ 2x - 4,35%	0,22-0,127	15/95/34	1,1/--/3	60	3P	Dyn1	4,5	Sol. 6	280	Sol.8	Max. Value	2160	470	55	No	1800x1650x1150	1500	Heavy	C3H	Yes	Yes
GST001/1949	Brazil	TBD	225	ONAN	13,8-3,98 (Group M/L)	1+ 2x - 4,35%(13,8) / 1+ 2x- 5,01%(3,98)	0,22-0,127	15/95/34	1,1/--/3	60	3P	Dyn1	4,5	Sol. 6	280	Sol.8	Max. Value	2160	470	55	No	1800x1650x1150	1500	Heavy	C3H	Yes	Yes

GST001/1951	Brazil	TBD	300	ONAN	13,8-3,98 (Group M/L)	1+ 2x - 4,35%(13,8) / 1+ 2x- 5,01%(3,98)	0,22-0,127	15/95/34	1,1/--/3	60	3P	Dyn1	4,5	Sol. 6	280	Sol.8	Max. Value	3275	585	55	No	1800x1650x1150	1500	Heavy	C3H	Yes	Yes
GST001/1953N	Brazil	TBD	225	KNAN	23,1 (Group O)	1+ 2 x - 4,76%	0,22-0,127	24/125/50	1,1/--/3	60	3P	Dyn1	5	Sol. 6	450	Sol.8	Max. Value	2240	530	55	No	2000x1700x1200	1500	Heavy	C3H	Yes	Yes
GST001/1954N	Brazil	TBD	150	KNAN	23,1 (Group O)	1+ 2 x - 4,76%	0,22-0,127	24/125/50	1,1/--/3	60	3P	Dyn1	4	Sol. 6	450	Sol.8	Max. Value	1630	380	55	No	1600x1450x950	950	Heavy	C3H	Yes	Yes
GST001/1956N	Brazil	TBD	75	KNAN	23,1 (Group O)	1+ 2 x - 4,76%	0,22-0,127	24/125/50	1,1/--/3	60	3P	Dyn1	4	Sol. 6	450	Sol.8	Max. Value	970	230	51	No	1600x1450x950	950	Heavy	C3H	Yes	Yes
GST001/1958N	Brazil	TBD	30	KNAN	23,1 (Group O)	1+ 2 x - 4,76%	0,22-0,127	24/125/50	1,1/--/3	60	3P	Dyn1	4	Sol. 6	450	Sol.8	Max. Value	475	115	48	No	1600x1400x900	950	Heavy	C3H	Yes	Yes
GST001/1962N	Brazil	TBD	30	KNAN	13,8 (Group M)	1+ 2x - 4,35%	0,22-0,127	15/95/34	1,1/--/3	60	3P	Dyn1	3,5	Sol. 6	280	Sol.8	Max. Value	450	110	48	No	1300x1300x750	950	Heavy	C3H	Yes	Yes
GST001/1964N	Brazil	TBD	100	KNAN	13,972 (Group I)	1+2x-4,54%	0,24-0,12	15/95/34	1,1/--/3	60	1P	Subtractive	2,5	Sol. 6	280	Sol.8	Max. Value	985	205	51	No	1700x900x1000	950	Heavy	C3H	Yes	Yes
GST001/1965N	Brazil	TBD	50	KNAN	13,972 (Group I)	1+2x-4,54%	0,24-0,12	15/95/34	1,1/--/3	60	1P	Subtractive	2,5	Sol. 6	280	Sol.8	Max. Value	510	130	48	No	1700x900x1000	950	Heavy	C3H	Yes	Yes
GST001/1966N	Brazil	TBD	25	KNAN	13,972 (Group I)	1+2x-4,54%	0,24-0,12	15/95/34	1,1/--/3	60	1P	Subtractive	2,5	Sol. 6	280	Sol.8	Max. Value	325	70	48	No	1300x800x900	950	Heavy	C3H	Yes	Yes
GST001/1968N	Brazil	TBD	25	KNAN	7,967 (Group G)	1+ 2x - 4,35%	0,24-0,12	15/95/34	1,1/--/3	60	1P	Additive	2,5	Sol. 6	280	Sol.8	Max. Value	325	70	48	No	1200x800x900	950	Heavy	C3H	Yes	Yes
GST001/1969N	Brazil	TBD	25	KNAN	7,967-2,320 (Group H)	1+ 2x - 4,35% (7,967) / 1+ 2x - 4,74% (2,320)	0,24-0,12	15/95/34	1,1/--/3	60	1P	Additive	2,5	Sol. 6	280	Sol.8	Max. Value	325	70	48	No	1200x800x900	950	Heavy	C3H	Yes	Yes
GST001/1970N	Brazil	TBD	50	KNAN	7,967 (Group G)	1+ 2x - 4,35%	0,24-0,12	15/95/34	1,1/--/3	60	1P	Additive	2,5	Sol. 6	280	Sol.8	Max. Value	510	130	48	No	1400x900x1000	950	Heavy	C3H	Yes	Yes
GST001/1971N	Brazil	TBD	50	KNAN	7,967-2,320 (Group H)	1+ 2x - 4,35% (7,967) / 1+ 2x - 4,74% (2,320)	0,24-0,12	15/95/34	1,1/--/3	60	1P	Additive	2,5	Sol. 6	280	Sol.8	Max. Value	510	130	48	No	1400x900x1000	950	Heavy	C3H	Yes	Yes
GST001/1972N	Brazil	TBD	75	KNAN	13,8 (Group M)	1+ 2x - 4,35%	0,22-0,127	15/95/34	1,1/--/3	60	3P	Dyn1	3,5	Sol. 6	280	Sol.8	Max. Value	910	215	51	No	1300x1350x950	950	Heavy	C3H	Yes	Yes
GST001/1973N	Brazil	TBD	75	KNAN	13,8-3,98 (Group M/L)	1+ 2x - 4,35%(13,8) / 1+ 2x- 5,01%(3,98)	0,22-0,127	15/95/34	1,1/--/3	60	3P	Dyn1	3,5	Sol. 6	280	Sol.8	Max. Value	910	215	51	No	1300x1350x950	950	Heavy	C3H	Yes	Yes
GST001/1974N	Brazil	TBD	100	KNAN	7,967 (Group G)	1+ 2x - 4,35%	0,24-0,12	15/95/34	1,1/--/3	60	1P	Additive	2,5	Sol. 6	280	Sol.8	Max. Value	985	205	51	No	1400x900x1000	950	Heavy	C3H	Yes	Yes

GST001/1975N	Brazil	TBD	100	KNAN	7,967-2,320 (Group H)	1+ 2x - 4,35% (7,967) / 1+ 2x - 4,74% (2,320)	0,24-0,12	15/95/34	1,1/--/3	60	1P	Additive	2,5	Sol. 6	280	Sol.8	Max. Value	985	205	51	No	1400x900x1000	950	Heavy	C3H	Yes	Yes
GST001/1978N	Brazil	TBD	150	KNAN	13,8 (Group M)	1+ 2x - 4,35%	0,22-0,127	15/95/34	1,1/--/3	60	3P	Dyn1	3,5	Sol. 6	280	Sol.8	Max. Value	1530	350	55	No	1300x1350x950	950	Heavy	C3H	Yes	Yes
GST001/1979N	Brazil	TBD	150	KNAN	13,8-3,98 (Group M/L)	1+ 2x - 4,35%(13,8) / 1+ 2x- 5,01%(3,98)	0,22-0,127	15/95/34	1,1/--/3	60	3P	Dyn1	3,5	Sol. 6	280	Sol.8	Max. Value	1530	350	55	No	1300x1350x950	950	Heavy	C3H	Yes	Yes
GST001/1980N	Brazil	TBD	225	KNAN	13,8 (Group M)	1+ 2x - 4,35%	0,22-0,127	15/95/34	1,1/--/3	60	3P	Dyn1	4,5	Sol. 6	280	Sol.8	Max. Value	2160	470	55	No	1800x1650x1150	1500	Heavy	C3H	Yes	Yes
GST001/1981N	Brazil	TBD	225	KNAN	13,8-3,98 (Group M/L)	1+ 2x - 4,35%(13,8) / 1+ 2x- 5,01%(3,98)	0,22-0,127	15/95/34	1,1/--/3	60	3P	Dyn1	4,5	Sol. 6	280	Sol.8	Max. Value	2160	470	55	No	1800x1650x1150	1500	Heavy	C3H	Yes	Yes
GST001/1982N	Brazil	TBD	300	KNAN	13,8 (Group M)	1+ 2x - 4,35%	0,22-0,127	15/95/34	1,1/--/3	60	3P	Dyn1	4,5	Sol. 6	280	Sol.8	Max. Value	2690	585	55	No	1800x1650x1150	1500	Heavy	C3H	Yes	Yes
GST001/1983N	Brazil	TBD	300	KNAN	13,8-3,98 (Group M/L)	1+ 2x - 4,35%(13,8) / 1+ 2x- 5,01%(3,98)	0,22-0,127	15/95/34	1,1/--/3	60	3P	Dyn1	4,5	Sol. 6	280	Sol.8	Max. Value	2690	585	55	No	1800x1650x1150	1500	Heavy	C3H	Yes	Yes
GST001/1984N	Brazil	TBD	30	KNAN	13,8	- 4x4,35%	0,22-0,127	17,5/95/38	1,1/--/3	60	3P	Dyn1	4	TBD	437,5	Sol.8	Max. Value	505	125	48	Yes	1300x1300x750	--	Very Heavy	C4H	No	No
GST001/1985N	Brazil	TBD	400	KNAN	13,8	- 4x4,35%	0,22-0,127	17,5/95/38	1,1/--/3	60	3P	Dyn1	4	TBD	437,5	Sol.8	Max. Value	6500	1200	55	Yes	1850X1600X1030	--	Very Heavy	C4H	No	No
GST001/1986N	Brazil	TBD	630	KNAN	13,8	- 4x4,35%	0,22-0,127	17,5/95/38	1,1/--/3	60	3P	Dyn1	4	TBD	437,5	Sol. 8	max. value	6500	1200	56	Yes	1850x1800x1030	--	Very Heavy	C4H	No	No
GST001/1987N	Brazil	TBD	800	KNAN	13,8	- 4x4,35%	0,22-0,127	17,5/95/38	1,1/--/3	60	3P	Dyn1	4	TBD	437,5	Sol.8	Max. Value	6500	1200	57	Yes	1850X1800X1030	--	Very Heavy	C4H	No	No
GST001/1988N	Brazil	TBD	1000	KNAN	13,8	- 4x4,35%	0,22-0,127	17,5/95/38	1,1/--/3	60	3P	Dyn1	4	TBD	437,5	Sol.8	Max. Value	6500	1200	58	Yes	1850X1800X1030	--	Very Heavy	C4H	No	No
GST001/1989N	Brazil	TBD	30	KNAN	13,8	+1x4,35% - 3x4,35%	0,38-0,22	17,5/95/38	1,1/--/3	60	3P	Dyn1	4	TBD	437,5	Sol.8	Max. Value	11000	1800	48	Yes	1300x1300x750	--	Very Heavy	C4H	No	No
GST001/1990N	Brazil	TBD	400	KNAN	13,8	+1x4,35% - 3x4,35%	0,38-0,22	17,5/95/38	1,1/--/3	60	3P	Dyn1	4	TBD	437,5	Sol.8	Max. Value	450	110	55	Yes	1850X1600X1030	--	Very Heavy	C4H	No	No
GST001/1991N	Brazil	TBD	800	KNAN	13,8	+1x4,35% - 3x4,35%	0,38-0,22	17,5/95/38	1,1/--/3	60	3P	Dyn1	4	TBD	437,5	Sol.8	Max. Value	11000	1800	57	Yes	1850X1800X1030	--	Very Heavy	C4H	No	No
GST001/1992N	Brazil	TBD	1000	KNAN	13,8	+1x4,35% - 3x4,35%	0,38-0,22	17,5/95/38	1,1/--/3	60	3P	Dyn1	4	TBD	437,5	Sol.8	Max. Value	11000	1800	58	Yes	1850X1800X1030	--	Very Heavy	C4H	No	No

GST001/1993N	Brazil	TBD	30	KNAN	34,5	- 4x4,35%	0,22-0,127	36/150/50	1,1/--/3	60	3P	Dyn1	4	TBD	690	Sol.8	Max. Value	2690	585	48	Yes	1600x1400x900	--	Very Heavy	C4H	No	No
GST001/1994N	Brazil	TBD	400	KNAN	34,5	- 4x4,35%	0,22-0,127	36/150/50	1,1/--/3	60	3P	Dyn1	4	TBD	690	Sol.8	Max. Value	2690	585	55	Yes	1850X1600X1030	--	Very Heavy	C4H	No	No
GST001/1995N	Brazil	TBD	630	KNAN	34,5	- 4x4,35%	0,22-0,127	36/150/50	1,1/--/3	60	3P	Dyn1	4	TBD	690	Sol.8	Max. Value	2690	585	56	Yes	1850x1800x1030	--	Very Heavy	C4H	No	No
GST001/1996N	Brazil	TBD	800	KNAN	34,5	- 4x4,35%	0,22-0,127	36/150/50	1,1/--/3	60	3P	Dyn1	4	TBD	690	Sol.8	Max. Value	450	110	57	Yes	1850X1800X1030	--	Very Heavy	C4H	No	No
GST001/1997N	Brazil	TBD	1000	KNAN	34,5	- 4x4,35%	0,22-0,127	36/150/50	1,1/--/3	60	3P	Dyn1	4	TBD	690	Sol.8	Max. Value	450	110	58	Yes	1850X1800X1030	--	Very Heavy	C4H	No	No

ANNEX B: TECHNICAL OFFER

This information has been designed for evaluating the compliance of a technical proposal (exclusively in a technical point of view) during the tender process and also might be used for the technical data validation during homologation, certification and/or approval procedures, if not specific documents is indicated.

The acceptance of the document for the tender stage does not mean the acceptance of any deviation to the technical specification if such deviations are not clearly reported.

Deviations are in principle not acceptable. Any deviation or any approach different from the Technical Specification GST001 shall be declared and explicitly highlighted, in order to be evaluated during the tender process.

ENEL TR Dx - TECHNICAL OFFER TEMPLATE

Item	RATINGS	Enel Requeriment	Manufacturer Declared Data (if not relevant indicate "---")	Manufacturer Notes(add remarks, if necessary)
1	GS TYPE CODE			
2	Dx. Company - Country (Enel Group)			
3	Country Code			
4	Nº of Phases			
5	Rated frequency fr (Hz)			
6	Connection Symbol			
7	Rated Power S_r (kVA)			
8	Cooling System			
9	Primary Rated Voltage U_r (kV)			
10	HV ins. Levels - (U_m/LI/AC) (kV)			
11	HV Volt. Reg. Type (DETC-NO DETC)			
12	HV Volt. Reg. (n. of steps, value %)			
13	Secondary Rated Voltage U_r (kV)			
14	LV Insulation levels (Um/LI/AC) (kV)			
15	Z_{sc} (% ref. S_r)			
16	Losses classes or max values			
17	Load Loss (W)			
18	No Load Loss (W)			
19	Sound level Power (dBA)			
20	Overall dimensions (mm) (hxlxw - heightxlengthxwidth)			

21	MAIN COMPONENTS AND ACCESSORIES		Manufacturer Declared Data(if not relevant indicate "---")	Manufacturer Notes(add remarks, if necessary)
22	Primary bushings Type - Standard			
23	Secondary bushings Type - Standard			
24	Thermal devices			
25	Thermometer (YES/NO)			
26	Standard reference/ Technical Specification(if any), to be indicated			
27	Insulating Liquid			
28	Type			
29	Standard reference to be indicated			
30	Other Accesories			
31	Lifting (ϕ mm) - Blocking devices (ϕ mm)			
32	Oil drain (reference standard)			
33	Support for surge arresters (Yes/ No)			
34	Filling hole and plug (filling cap)			
35	Brackets for pole (Yes/ No)			
36	Wheels (Yes/No)			
37	Over-pressure valve			
38	DESIGN DATA		Manufacturer Declared Data (if not relevant indicate "---")	Manufacturer Notes(add remarks, if necessary)
39	Windings and core	Primary - Secondary	Primary - Secondary	
40	Conductor material Type			
41	Core material type			
42	Painting cycle			
43	Painting category (C3M, C3H, C4H, …)			
44	Certificate in compliance to ISO 12944 (Yes/No)			
45	Weights			
46	Oil (as in operation) (Liters)			
47	Total (kg)			
48	Additional Requeriment			
49	Additional Requeriment 1			
50	Additional Requeriment 2			
51	Additional Requeriment 3			
52	DEVIATIONS		Manufacturer Declared Data (if not relevant indicate "---")	Manufacturer Notes (add remarks, if necessary)

53	Deviations (YES/NO) Indicate if there is any deviation from Global Standard/Datasheet. if there is any deviation, the name of the Deviation Document attached - Each specific deviation must be reported and explained(Manufacurer Notes)			

IMPORTANT:

This template is used for evaluating the compliance of a technical proposal (exclusively in a technical point of view) during the tender process.
Deviations are in principle not acceptable. Any deviation or any approach different from the technical specification.

GST001 ANNEX C – BRAZIL

CONTENTS

7 DESCRIPTION **76**

7.1 Service conditions 76

7.2 Ratings 76
7.2.1 Type of transformers 76
7.2.2 Number of windings 76
7.2.3 Number of phases 76
7.2.4 Cooling system 76
7.2.5 Rated power 76
7.2.6 Rated voltages 76
7.2.7 Rated frequency 76
7.2.8 Voltage regulation 76
7.2.9 Windings connections 76
7.2.10 Installation 76
7.2.11 Insulation levels 77
7.2.12 Losses, short circuit impedances and sound power levels 77
7.2.13 Temperature rise 77
7.2.14 Capability to withstand short-circuit 77
7.2.15 Overloading 77
7.2.16 Sound levels 77
7.2.17 Overall dimensions and layout 77
7.2.18 Rating plates 82
7.2.19 Tolerances 84

7.3 Design requirements 84
7.3.1 Core 84
7.3.2 Windings 84
7.3.3 Tank 84
7.3.4 Insulating liquid and material 84
7.3.5 Liquid insulating filling and sealing procedures 84
7.3.6 Bushings 84
7.3.7 De-energized tap-changer for MV voltage regulation 87
7.3.8 De-energized tap-changer for MV voltage commutation 88
7.3.9 Supporting and sliding devices 88
7.3.10 Protective painting 88
7.3.11 Accessories 88
7.3.12 Identification of accessories and components 91

7.4 Exceptions 91

7.5 Documentation 91
7.5.1 Document for the offer 91
7.5.2 Documentation for the technical conformity assessment (TCA) 91
7.5.3 Documents for delivering 91

7.6 Tests 91
7.6.1 List and classification of tests 91
7.6.2 Tests description 91

7.7 Guarantee 91

7.8 Transport and packing 91
7.9 Other local issues 91
7.10 Figures 91

7 DESCRIPTION

This document prescribes the technical requirements for the supply of the distribution transformers to be used in the distribution networks in the Enel Grids Brazil.

7.1 Service conditions

7.2 Ratings

7.2.1 Type of transformers

7.2.2 Number of windings

7.2.3 Number of phases

7.2.4 Cooling system

7.2.5 Rated power

7.2.6 Rated voltages

7.2.7 Rated frequency

7.2.8 Voltage regulation

7.2.9 Windings connections

7.2.10 Installation

Table C1 – Mounting System

Single pole	Double pole	Surface level
≤ 300 kVA (max weight 1500 kg)	not used	≤ 630 kVA

For Enel Distribuição São Paulo the following groups of connections should be considered:

Table C2 - Groups

Groups	Taps MV (V)	Dispatch voltage (V)	LV (V)
G	7967 / 7621 / 7275	7621	240/120
H	7967 / 7621 / 7275 / 2320 / 2210 / 2100	2210	
I	13972 / 13337 / 12702	13337	
M	13800 / 13200 / 12600/12000/11400	13200	220/127
M/L	13800 / 13200 / 12600 / 3985 / 3785 / 3585	3785	
O	23100 /22000 / 20900	23100	

7.2.11 Insulation levels

7.2.12 Losses, short circuit impedances and sound power levels

7.2.13 Temperature rise

7.2.14 Capability to withstand short-circuit

7.2.15 Overloading

7.2.16 Sound levels

7.2.17 Overall dimensions and layout

See List of components and Figure C2 (A, B, C), Figure C4, Figure C5 and Figure C6, which define the maximum dimensions for the length, the width (depth) and the height of transformers and the layout of the main elements (bushings, supports, anchoring bases or wheels).

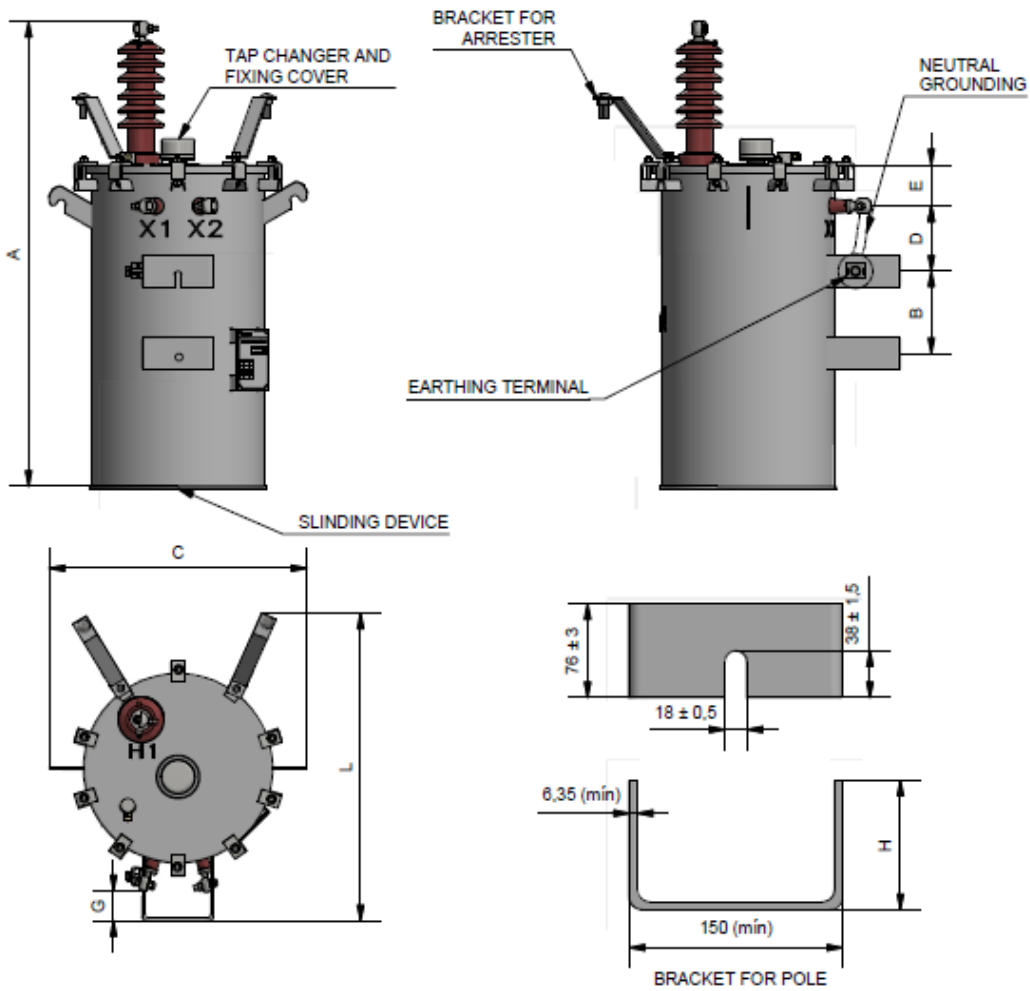

Figure C1A - Dimensions to single-phase transformers

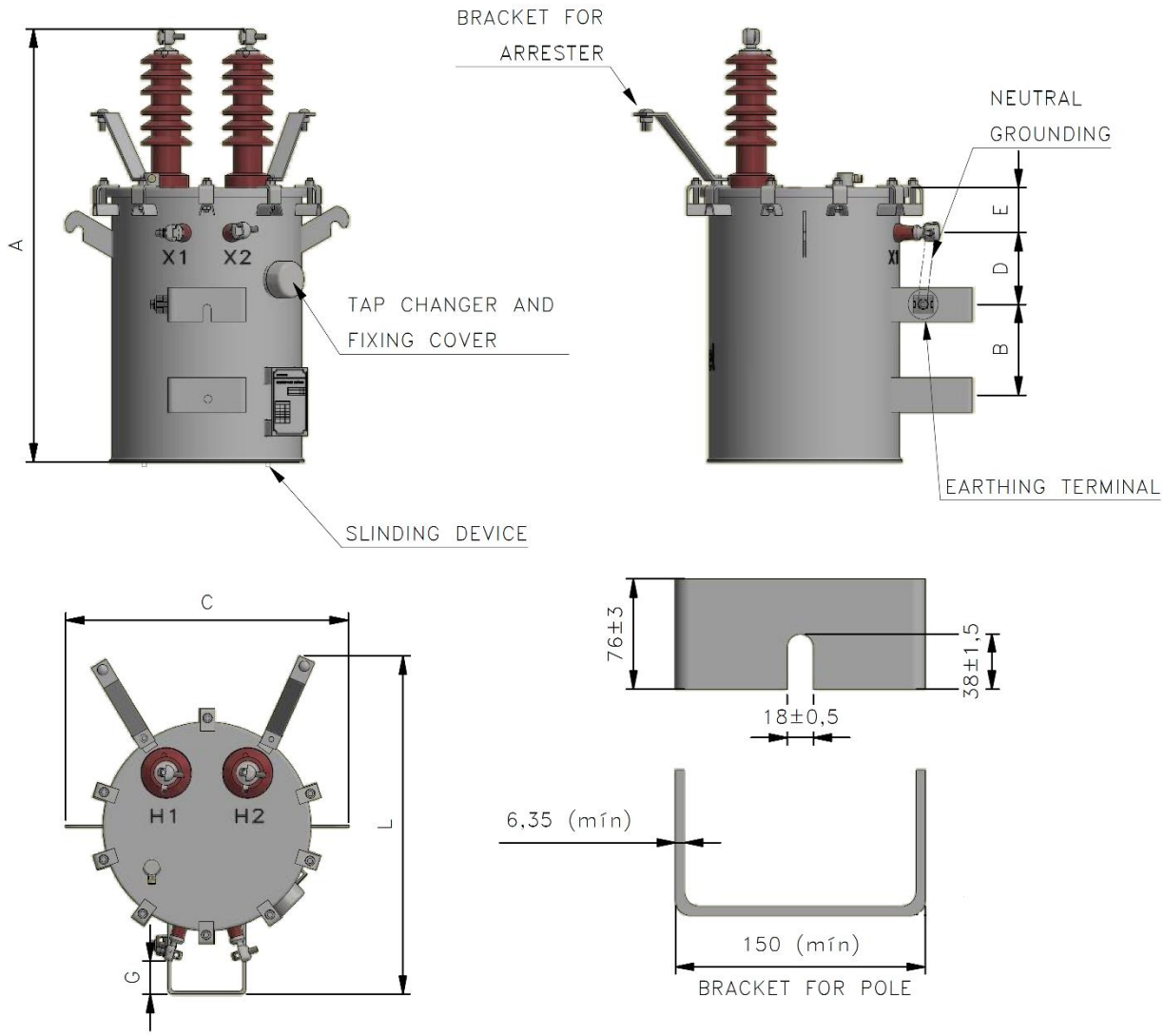

Figure C2B - Dimensions to two-phase transformers

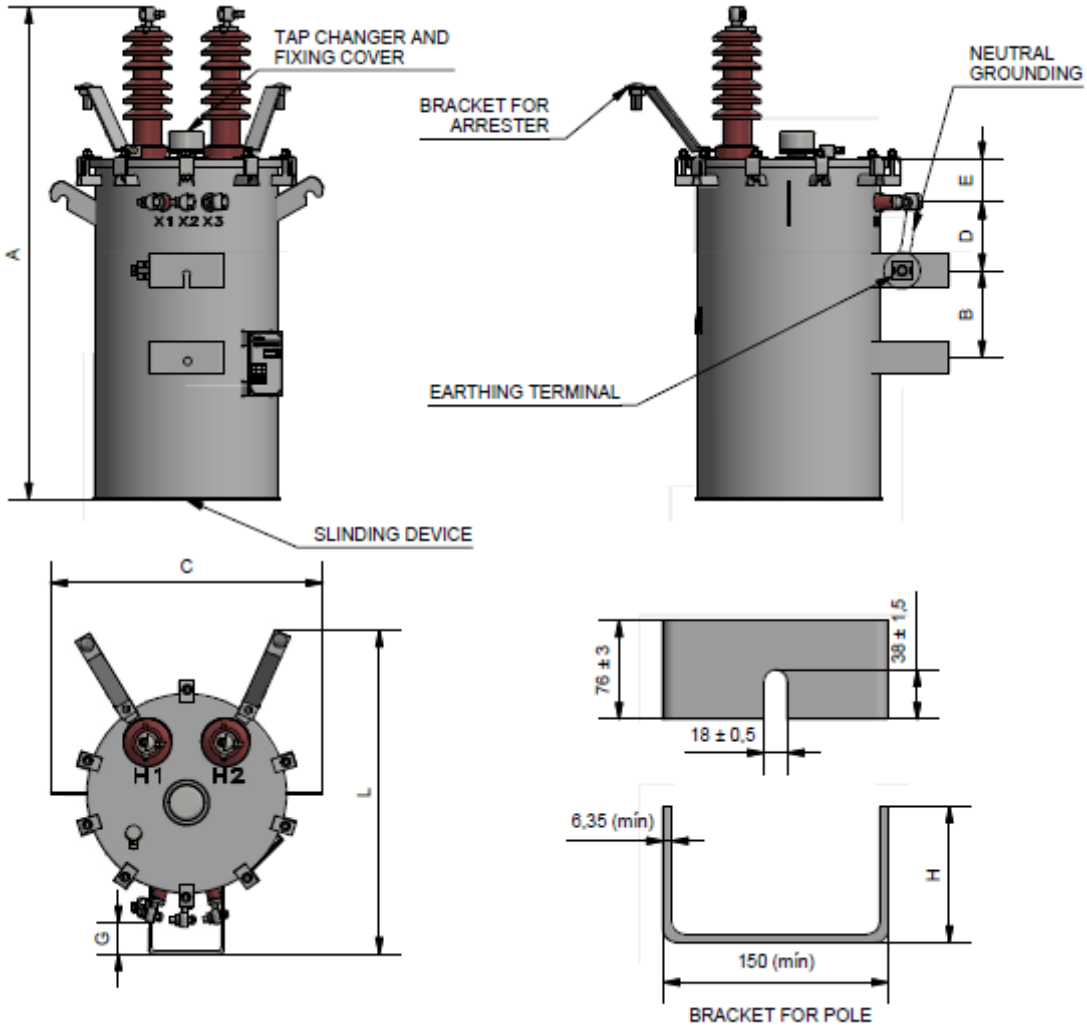

Figure C3C - Dimensions to single-phase and two-phase transformers

Note: The transformers may have one or two MV bushings and two or three LV bushings (center tap).

Table C3 - Single-phase and Two-phase Transformer dimensions

		15kV		24,2 or 36,2 kV	
		P ≤ 37,5	P > 37,5	P ≤ 37,5	P > 37,5
Maximum dimensions	A	1200	1400	1300	1700
	C	800	900	800	900
	L	900	1000	900	1000
Minimum dimensions	G	50	50	50	50
Tolerance D and B ±5%,	D	120	150	120	150
	B	200	400	200	400

E ± 10%	E	100	100	100	100
P = Rated Power Transformer [kVA]					

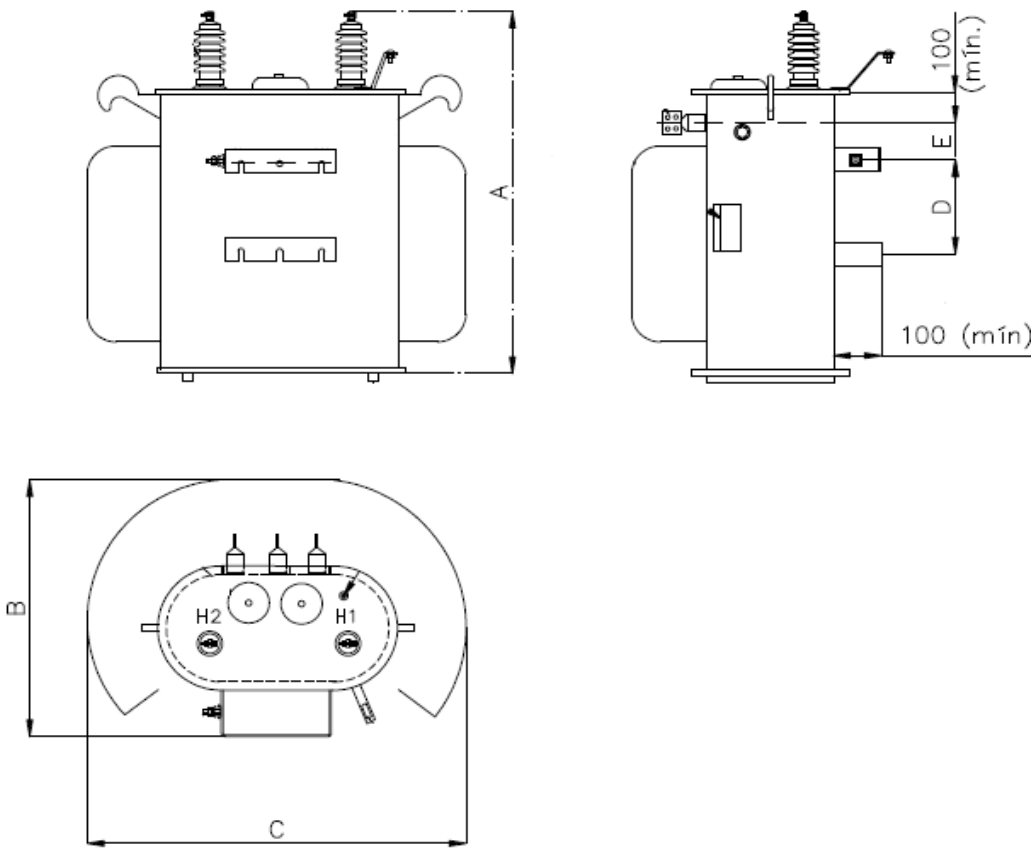

Figure C4 - Dimensions to single-phase transformer for Enel Distribuição São Paulo

Table C4 - Single-phase Transformer dimensions for Enel Distribuição São Paulo

		15kV	
		10 ≤ P ≤ 25	50 ≤ P ≤ 100
Maximum dimensions	A	1200	1400
	B	900	1000
	C	800	900
	E	120	150
Tolerance D ±5%	D	300	300
P = Rated Power Transformer [kVA]			

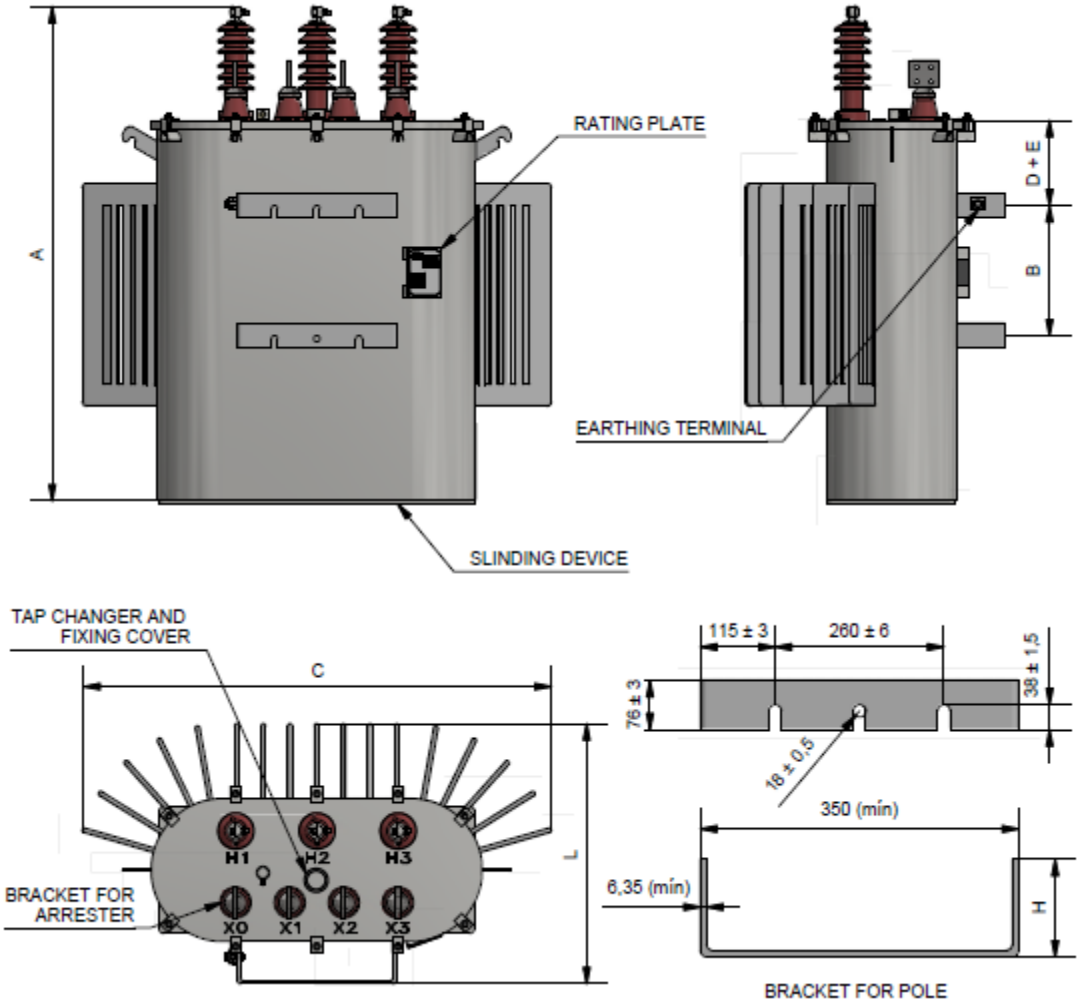

Figure C5 - Dimensions to three-phase transformer

Table C5 - Three-phase transformer dimensions

		15kV			24,2 or 36,2 kV		
		P ≤ 45	45 < P ≤ 150	P > 150	P ≤ 45	45 < P ≤ 150	P > 150
Maximum dimensions	A	1300	1300	1800	1600	1600	2000
	C	1300	1350	1650	1400	1450	1700
	L	750	950	1150	900	950	1200
Tolerance D and B ±5%, E ± 10%	D	120	150	150	120	150	150
	B	200	200 ou 400	400	200	200 ou 400	400
	E	100	100	100	100	100	100

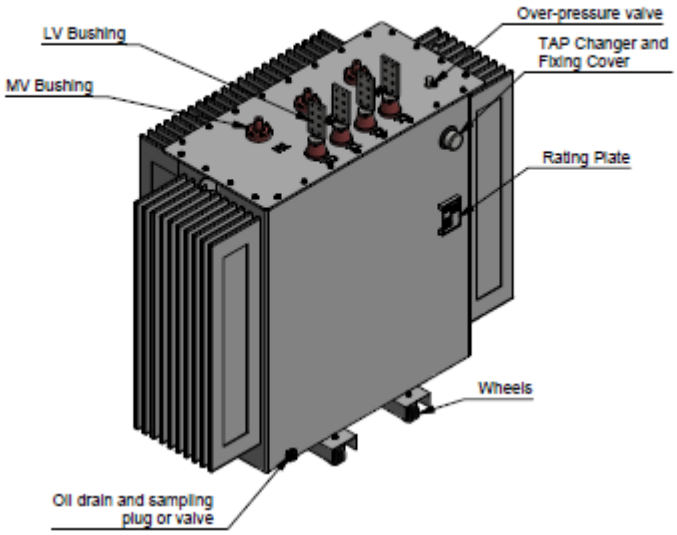

Perspective View

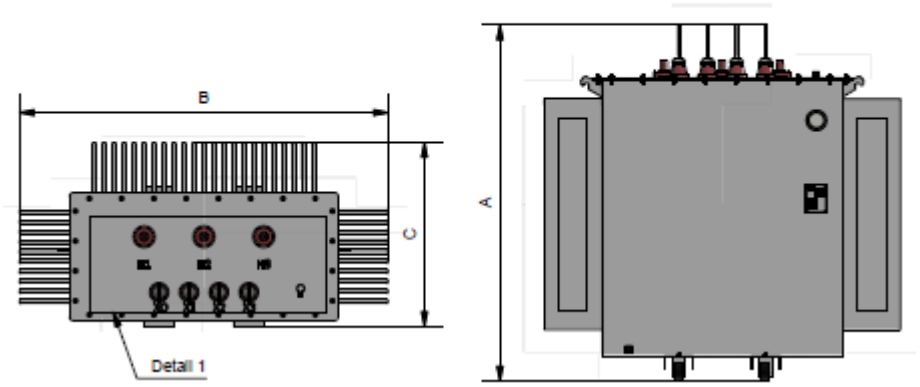

Figure C6 - Dimensions to three-phase transformer

Table C6 - Transformer dimensions

		Rated Power				
		30 kVA	400 kVA	630 kVA	800 kVA	1000 kVA
Dimensions (mm)	A	1300	1850	1850	1850	1850
	B	1300	1600	1800	1800	1800
	C	750	1030	1030	1030	1030

7.2.18 Rating plates

The nameplate language shall be in Portuguese.

Additional to data requested in IEC standard must be added:

- Level noise;
- Losses;
- Winding material;
- Serial number;
- Purchase order number;
- Date of manufacture (Day, Month, Year).

The manufacturing serial number shall be punctured on the following points:

- nameplate;
- suspension hook, preferably the one to the right of an observer facing the LV bushing side;
- upper clamping bars of the core.

Note: The number should be engraved before the final paint and preferably before the anti-corrosive paint.

For Enel São Paulo a spreadsheet must be sent containing the identification of the transformer (serial number and patrimonial number of Enel São Paulo – Nº TXXX) and its losses and characteristics.

All transformers must have the National Energy Conservation Label - ENCE of the Brazilian Labeling Program - PBE, according to Portaria Interministerial n°3/2018 and Portaria Inmetro nº 378/2010.

The manufacturer must provide certification on the nameplate with the following text in Portuguese: “DOES NOT CONTAIN ANY DETECTABLE PCB AT THE TIME OF MANUFACTURING”. The adhesive must be made of UV-resistant material, with dimensions of 100 x 100 mm, as shown in Figure C7.

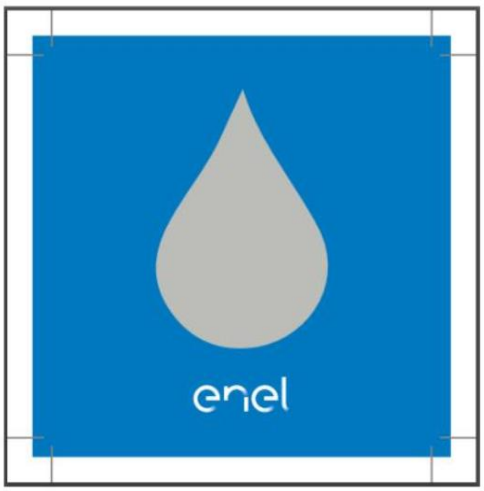

Figure C7 - Identification of PCB-free equipment

7.2.19 Tolerances

7.3 Design requirements

7.3.1 Core

7.3.2 Windings

7.3.3 Tank

7.3.4 Insulating liquid and material

For Enel Grids Brazil, the solid insulating material of heat stable paper (equal or higher than Class “E” 120°C) will be required.

7.3.5 Liquid insulating filling and sealing procedures

7.3.6 Bushings

The MV bushing for transformers in Figure C1A, Figure C2B, Figure C3C and Figure C5 is considered to Brazil the solution 6 of IEC 60137.

For Enel Distribuição São Paulo, for transformers in groups G and H (single phase transformers - Figure C4), the MV bushing shall be according to EN 50180 - type 12-250/P4 or ABNT NBR 5435 - type 15 kV / T2 / 160 A / nível II.

The MV bushing for transformer in Figure C6 is considered a plug-in solution (see List of Components).

The MV terminal connector for MV bushing solution 6 must be according to Figure C8.

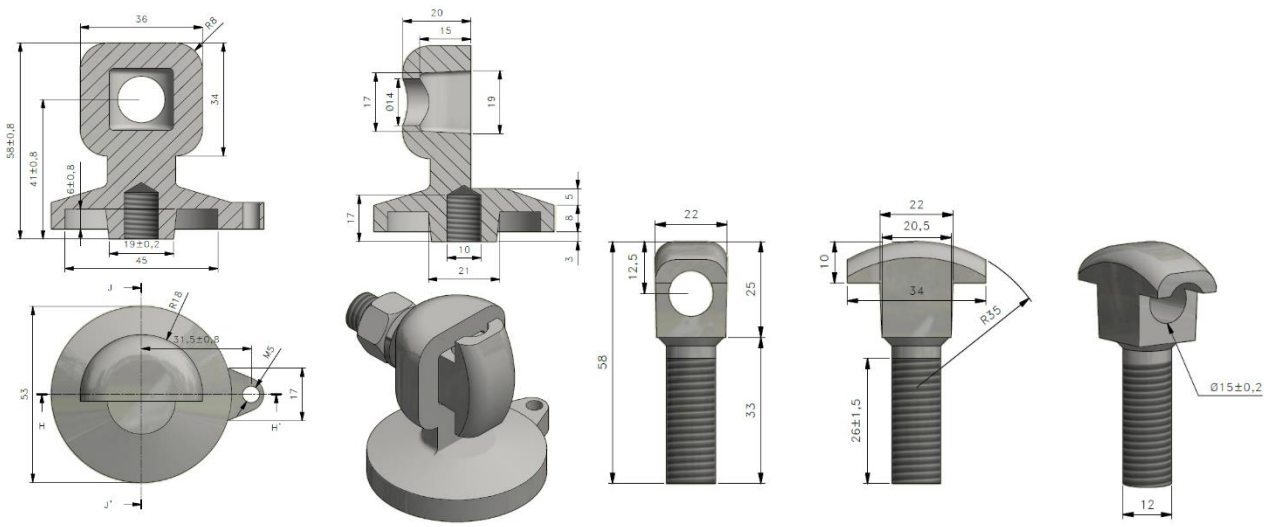

Figure C8 - MV terminal

The LV bushing for transformers in Figure C2 (A, B, C), Figure C5 and Figure C5 is considered to Brazil the solution 8, considering porcelain as IEC 60137, or porcelain insulators and terminals according to ABNT NBR 16856 standard NEMA or where indicated, see Table C7.

Table C7 - Type of low voltage terminal connectors

Capacity [kVA]	ENEL DISTRIBUIÇÃO CEARÁ	ENEL DISTRIBUIÇÃO RIO	ENEL DISTRIBUIÇÃO SÃO PAULO
≤75kVA	Locking connector	Blade connector (NEMA 2 – T2)	Blade connector (NEMA 4 – T3) – 160 A
>75kVA and ≤150kVA	Blade connector (NEMA 4 – T3)	Blade connector (NEMA 4 – T3)	Blade connector (NEMA 4 – T3)
>150kVA	Blade connector (NEMA 4 – T3)	Blade connector (NEMA 4 – T3)	Blade connector (NEMA 4 – T3)

The LV bushings must be located in the same side of the bracket for pole, except for transformers that will be used in Delta system for Enel Distribuição São Paulo (groups G and H).

For LV terminal Locking connector, see Figure C9.

For LV terminal Blade connector (NEMA 2), see Figure C10.

For LV terminal Blade connector (NEMA 4), see Figure C11.

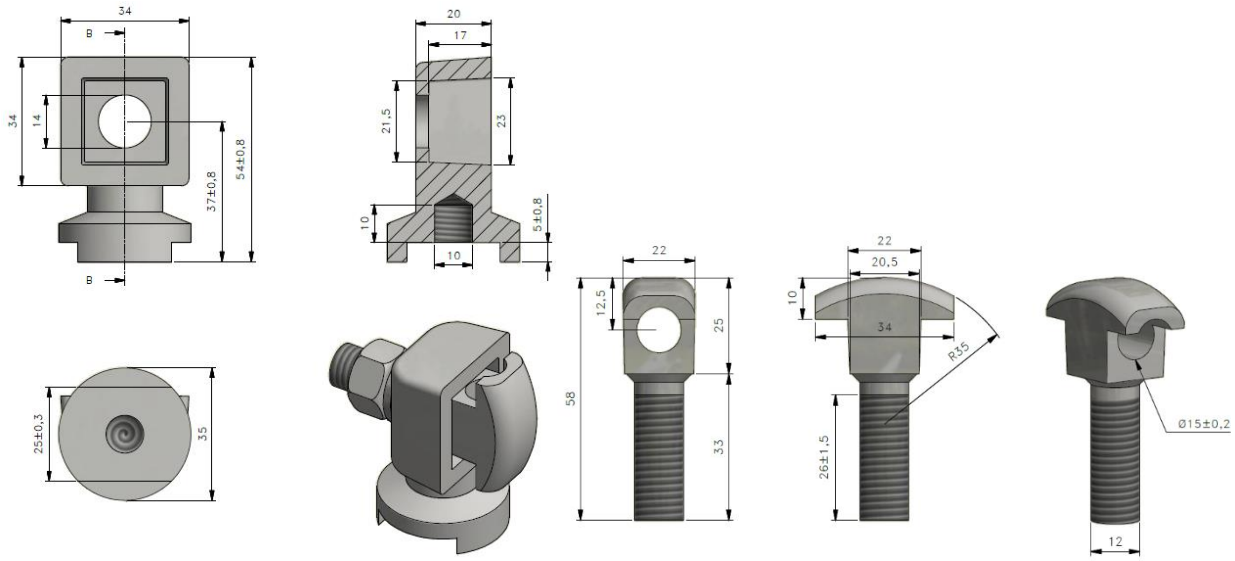

Figure C9 - LV terminal locking connector

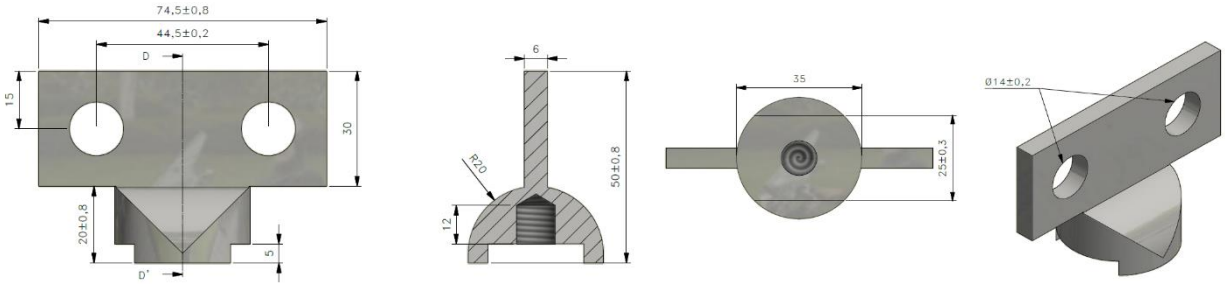

Figure C10 - LV terminal Blade connector (NEMA 2)

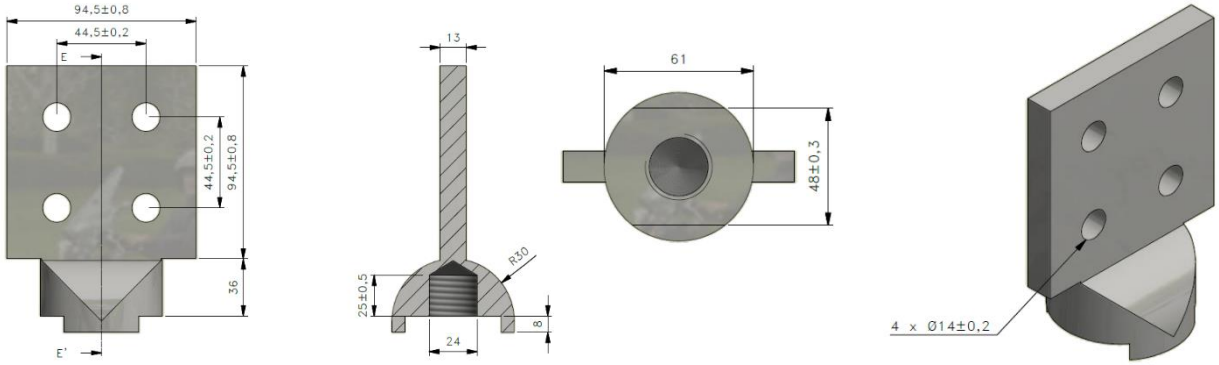

Figure C11 - LV terminal Blade connector (NEMA 4)

The LV bushing for transformer in Figure C6 is considered to Brazil the solution 8 considering porcelain or epoxy as IEC 60137, or porcelain insulators and terminals according to ABNT NBR 16856 standard NEMA or where indicated, see Table C8.

Table C8 - Type of low voltage terminal connectors

Capacity [kVA]	Connector Type	
	380 V	220 V
30 kVA	Blade connector (Type 1)	Blade connector (Type 1)
400 kVA	Blade connector (Type 2)	Blade connector (Type 2)
630 kVA		
800 kVA	Blade connector (Type 3)	Blade connector (Type 3)
1000 kVA		

For LV terminal Blade connector standard NEMA is indicated in Figure C12.

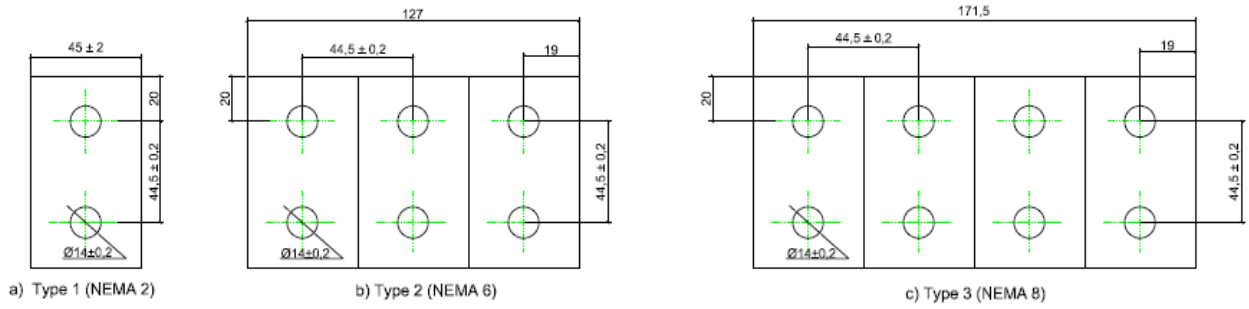

Figure C12 - LV terminal Blade connector (NEMA)

The LV terminal blade must be installed in LV bushing as indicated in Figure C13.

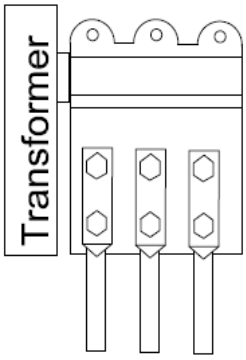

Figure C13 - Assembly detail

The sequence for each phase of the distribution transformer shall be marked. The identification shall be engraved in high relief or bas-relief, each phase painted in color black.

During the draft approval stage, details for the required markings and identification will be indicated.

7.3.6.1 MV bushings

7.3.6.2 LV bushings

7.3.7 De-energized tap-changer for MV voltage regulation

The DETC will be located on the tank side for single-phase and two-phase transformers and at the low voltage side installed to ensure tightness. The lid switch must be fixed to the tank in order to be unmissable.

For Enel Distribuição São Paulo, it is allowed to use internal DETC for groups H and M/L. In these cases, the transformer must be provided with an inspection window at the top for access to the DETC.

7.3.8 De-energized tap-changer for MV voltage commutation

7.3.9 Supporting and sliding devices

The position of the mounting support (on the MV or LV) for single-pole mounted transformer must be fixing bracket in the LV side for all power values, except for groups G and H of Enel Distribuição São Paulo.

For transformers in Figure C2 (A, B, C), Figure C5 and Figure C5 the sliding devices shall be placed at the base of the tank, which serve as fixing means and / or allowing a minimal height over the floor during storage, according to the weight of the equipment.

7.3.10 Protective painting

The color is RAL7038.

For natural ester transformers the color is RAL6037.

7.3.11 Accessories

7.3.11.1 Lifting and blocking devices

7.3.11.2 Liquid draining plug

For transformers in Figure C2 (A, B, C), Figure C5 and Figure C5 is not required.

The transformer in Figure C6 shall be provided with oil drain device and sampling plug or valve complying.

7.3.11.3 Thermometer pocket

Required only for transformers in Figure C6.

7.3.11.4 Thermometer

7.3.11.5 Overpressure valve

For gas cushion transformers the over pressure valve is required for all power values.

The overpressure valve must always be installed facing the pole side. For transformers that have the LV bushing located at the top, the valve must be installed so that, if the valve is activated, the insulating liquid is directed to the pole.

7.3.11.6 Liquid level indicator

7.3.11.7 Support for surge arresters

The transformers in Figure C2 (A, B, C), Figure C5 and Figure C5 must be provided of a support (one each phase) for the installation of medium voltage arresters (see Figure C15 and Figure C15).

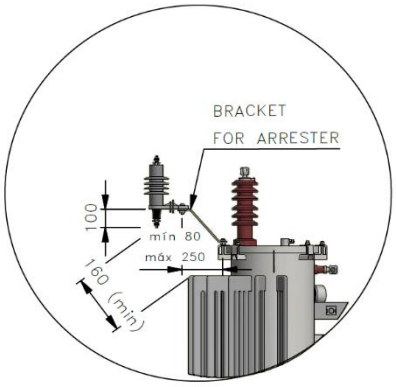

Figure C14 - Bracket for transformer with radiator

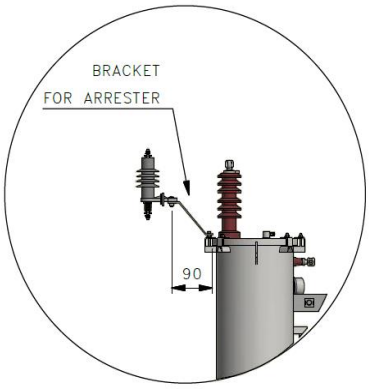

Figure C15 - Bracket for transformer without radiator

The drilling of the support for surge arrester must be according to Figure C16.

The bolt, nut and washer to fix the arrester should be part of the transformer supply. The minimum screw size is shown in **Errore. L'origine riferimento non è stata trovata.**.

Figure C16 - Bracket for transformer

7.3.11.8 Earthing terminals

These terminals shall be placed at the support fixed to tank.

The terminal shall allow the connection of two cables from 10mm² to 70mm² (see **Errore. L'origine riferimento non è stata trovata.**).

The transformers shall have a grounding connector. The terminal will have a hexagonal head screw, thread type M12x1.75 (diameter by length) and a washer, both made from stainless steel or brass, with a minimum copper content of 60%. In addition, the tin-plated bronze grounding connector (minimum 8µm) shall be supplied.

Figure C17 - Earthing terminal detail

7.3.11.9 Rating plates and plate-holders

See item 7.2.18.

7.3.11.10 Filling hole and plug (filling cap)

To allow for the completion of the leak test, the transformer shall have a small tube in the top ½" internal thread and plug for nitrogen filling.

7.3.11.11 Protection device (e.s type DGPT)

7.3.12 Identification of accessories and components

7.4 Exceptions

7.5 Documentation

7.5.1 Document for the offer

7.5.2 Documentation for the technical conformity assessment (TCA)

7.5.2.1 Not-reserved documentation (Type A)

7.5.2.2 Reserved documentation (Type B)

7.5.3 Documents for delivering

7.6 Tests

7.6.1 List and classification of tests

7.6.1.1 Routine tests

7.6.1.2 Type tests

7.6.1.3 Type tests on accessories

7.6.1.4 Special tests

7.6.1.5 General statements for the tests

7.6.2 Tests description

7.6.2.1 Routine tests

7.6.2.2 Type tests

Test for support fixed to tank (ABNT NBR 5440): The support must be tested with the transformer installed only by the center screws.

7.6.2.3 Type tests on accessories

7.6.2.4 Special tests

7.7 Guarantee

7.8 Transport and packing

7.9 Other local issues

7.10 Figures

PARTICULAR SCHEMES FOR BRAZIL

<u>Transformer Indentification:</u>

For transformer without radiator: the power of the transformer, the coding and the name Enel must be located

at the rear and horizontally arranged (see Figure C18).

For transformer with radiator: the power and coding must be located above the radiator and the name Enel below (see Figure C18).

Note 1: If the space above or below the radiator is insufficient, they should be located near the nameplate, with the vertical coding, the power and the name Enel horizontal.

Note 2: It is assumed that the name of Enel is located between the fastening brackets when it does not fit in the other recommended locations. In any case, the coding of the transformer must be easy to see whether it is in the ground or installed on a pole.

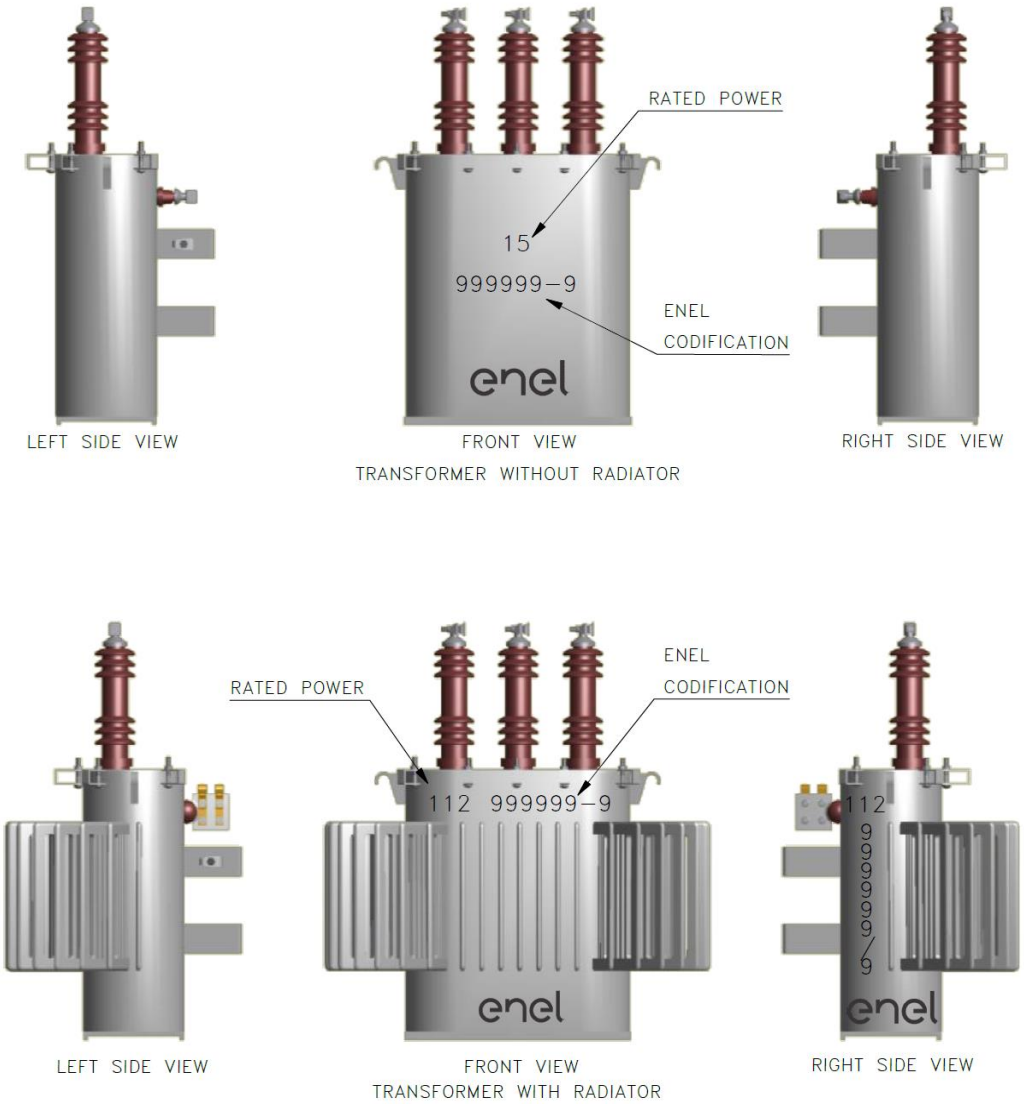

Figure C18 - Transformer Identification

The name Enel must have dimensions as shown in Figure C19. For further coding, each digit of the encoding should have dimension of 35mm in height and 25mm in width.

Figure C19 - Name Enel

For Enel Distribuição São Paulo the phase marking must be according to Figure C20 and Figure C21. For Group M, the rated MV voltage “13,8 kV” must be marked next H2:

Single- phase transformer	
Group I (Subtractive)	**Group G e H (Additive)**
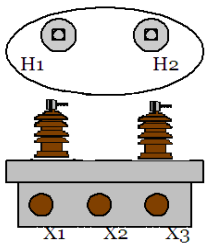	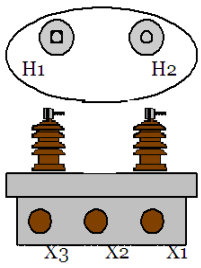

Figure C20 - Phase Markings single-phases

Three-phase transformer
Groups M, M/L, and O.

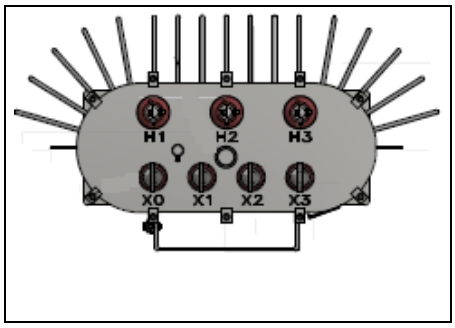

Figure C21 - Phase Markings three-phases

GST001 ANNEX D - CHILE

CONTENTS

7 DESCRIPTION **98**

7.1 Service conditions 98

7.2 Ratings 98
7.2.1 Type of transformers 98
7.2.2 Number of windings 98
7.2.3 Number of phases 98
7.2.4 Cooling system 98
7.2.5 Rated power 98
7.2.6 Rated voltages 98
7.2.7 Rated frequency 98
7.2.8 Voltage regulation 98
7.2.9 Windings connections 98
7.2.10 Installation 98
7.2.11 Insulation levels 98
7.2.12 Losses, short circuit impedances and sound power levels 98
7.2.13 Temperature rise 99
7.2.14 Capability to withstand short-circuit 99
7.2.15 Overloading 99
7.2.16 Sound levels 99
7.2.17 Overall dimensions and layout 99
7.2.18 Rating plates 101
7.2.19 Tolerances 101

7.3 Design requirements 101
7.3.1 Core 101
7.3.2 Windings 101
7.3.3 Tank 101
7.3.4 Insulating liquid and material 101
7.3.5 Liquid insulating filling and sealing procedures 101
7.3.6 Bushings 101
7.3.7 De-energized tap-changer for MV voltage regulation 104
7.3.8 De-energized tap-changer for MV voltage commutation 104
7.3.9 Supporting and sliding devices 104
7.3.10 Protective painting 104
7.3.11 Accessories 105
7.3.12 Identification of accessories and components 109

7.4 Exceptions 109

7.5 Documentation 109
7.5.1 Document for the offer 109
7.5.2 Documentation for the technical conformity assessment (TCA) 109
7.5.3 Documents for delivering 109

7.6 Tests 109
7.6.1 List and classification of tests 109
7.6.2 Tests description 109

7.7 Guarantee 109

7.8 Transport and packing 109
7.9 Other local issues 109
7.10 Figures 109

7 DESCRIPTION

The scope of this Local Section is to integrate the Common Part in order to provide the technical standard requirements for the MV/LV transformers of Enel Distribución.

7.1 Service conditions

7.2 Ratings

7.2.1 Type of transformers

7.2.2 Number of windings

7.2.3 Number of phases

7.2.4 Cooling system

7.2.5 Rated power

7.2.6 Rated voltages

7.2.7 Rated frequency

7.2.8 Voltage regulation

7.2.9 Windings connections

7.2.10 Installation

The type of installation can be indoor or outdoor.

Company	Mounting System		
	Single-Pole (outdoor)	Double-Pole (outdoor)	Surface-Level (indoor)
Enel Distribución Chile	≤50 kVA	>50 kVA	≥400 kVA

Table D1 - Installation

All transformers require anchoring base to be used either single-pole, double pole or surface level and TR ≤100kVA require support.

For more details of supports, see section 7.10.

7.2.11 Insulation levels

7.2.12 Losses, short circuit impedances and sound power levels

See List of Components.

7.2.13 Temperature rise

7.2.14 Capability to withstand short-circuit

7.2.15 Overloading

7.2.16 Sound levels

7.2.17 Overall dimensions and layout

See List of Components. TR MV/LV and **Errore. L'origine riferimento non è stata trovata.**Figure D2 and Figure D3 which define the maximum dimensions for the length, the width (depth) and the height of transformers and the layout of the main elements (bushings, supports, anchoring bases or wheels).

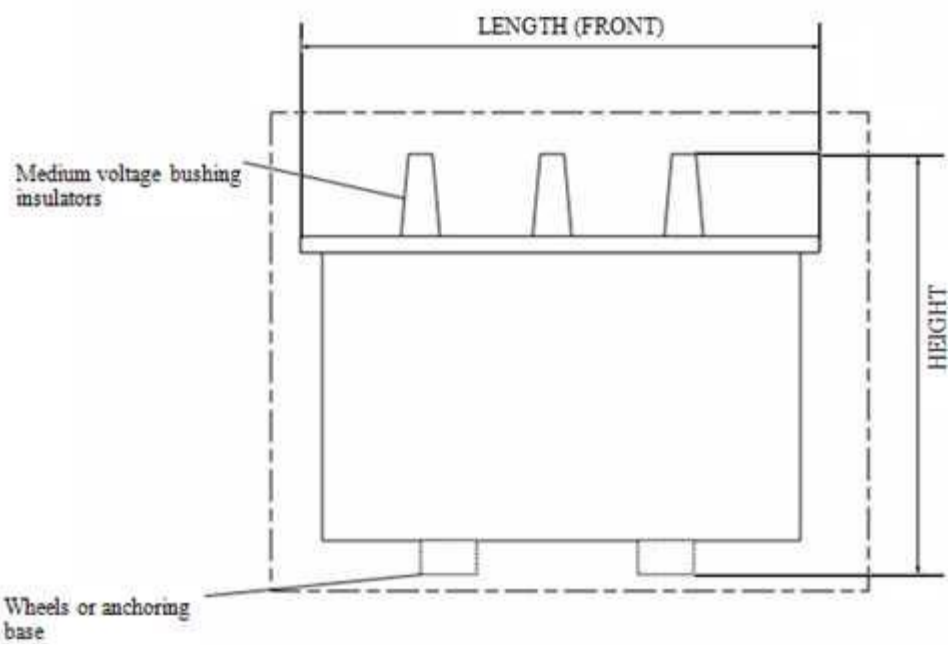

Figure D1 - Dimensions and layout of the main elements (Elevation)

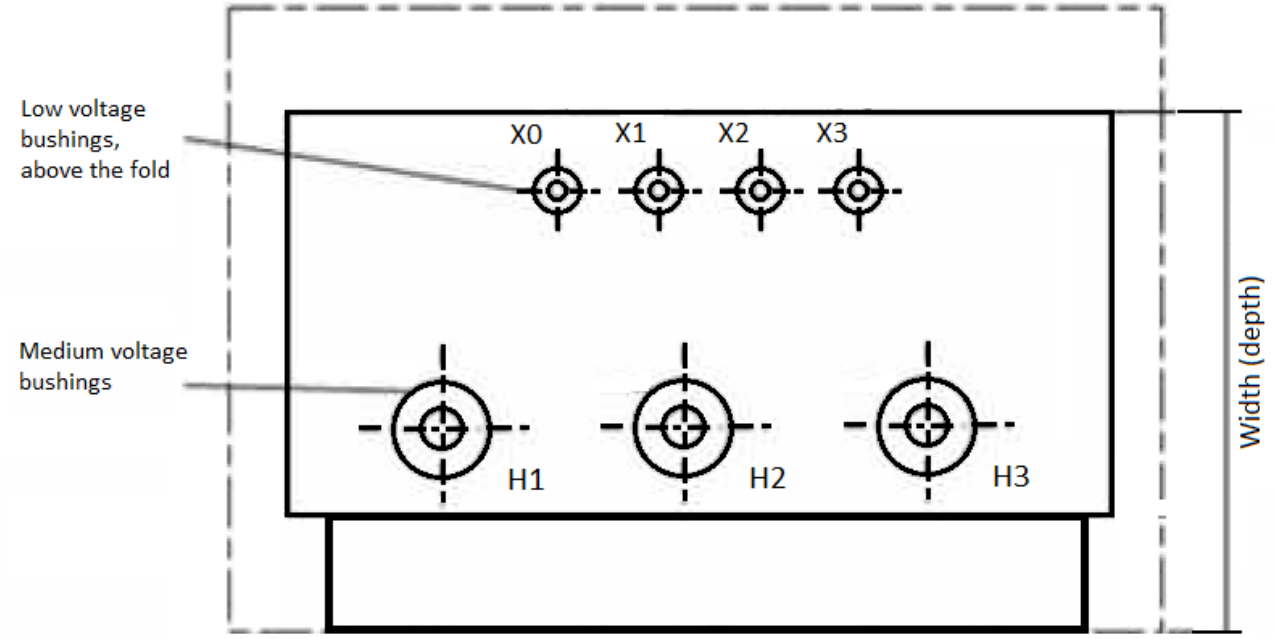

Figure D2 - Dimensions and layout of main elements (Top)

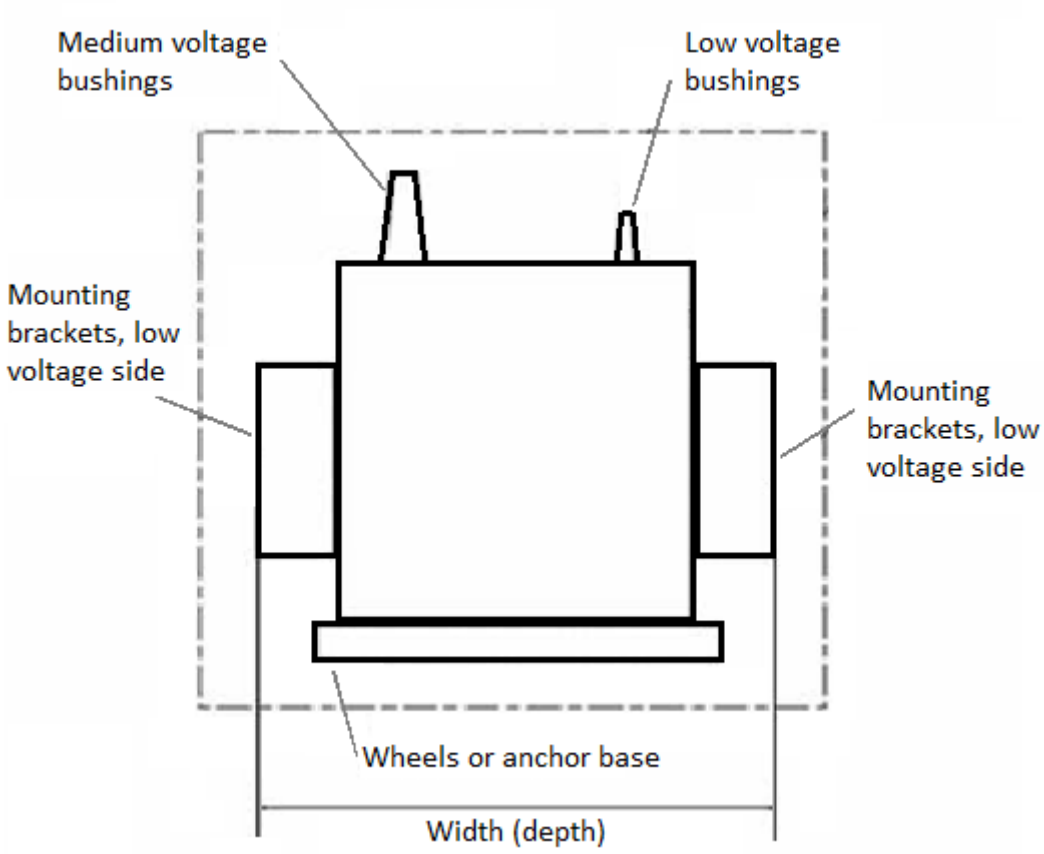

Figure D3 - Dimension and layout of the main elements (Side)

7.2.18 Rating plates

7.2.19 Tolerances

7.3 Design requirements

7.3.1 Core

7.3.2 Windings

7.3.3 Tank

7.3.4 Insulating liquid and material

7.3.5 Liquid insulating filling and sealing procedures

7.3.6 Bushings

- <u>Phase markings and identification</u>

The sequence for each phase of the distribution transformer should be marked. The identification should be engraved in high relief or bas-relief, each phase painted with a different color.

Bushings Color Code (see 7.2.17 Overall Dimensions and Layout, Figure D2):

- H1: Blue
- H2: White
- H3: Red
- X0: -
- X1: Red
- X2: Blue
- X3: White

7.3.6.1 MV bushings

7.3.6.2 LV bushings

The LV bushing is considered to Enel Distribución Chile, for an outdoor according to:

Capacity [kVA]	Enel Distribución
≤50kVA	Locking connector
>50kVA and ≤100kVA	Blade connector (NEMA 2)
≥160kVA	Blade connector (NEMA 4)

Table D2 – Outdoor type of low voltage terminal connectors

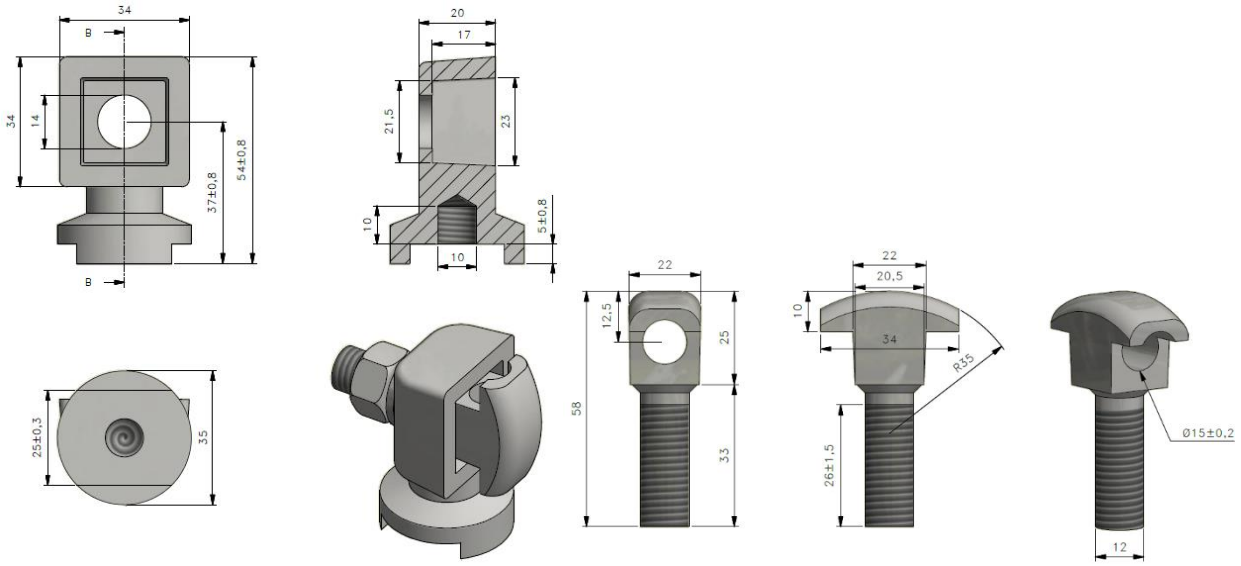

Figure D4 – LV terminal locking

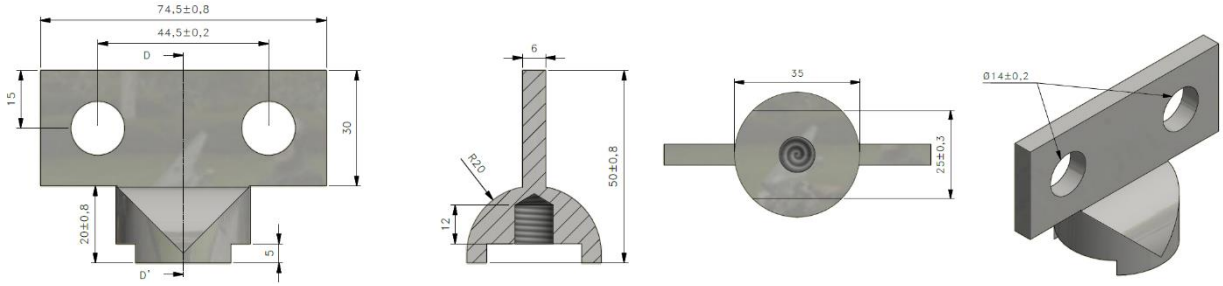

Figure D5 - LV terminal Blade connector (NEMA 2)

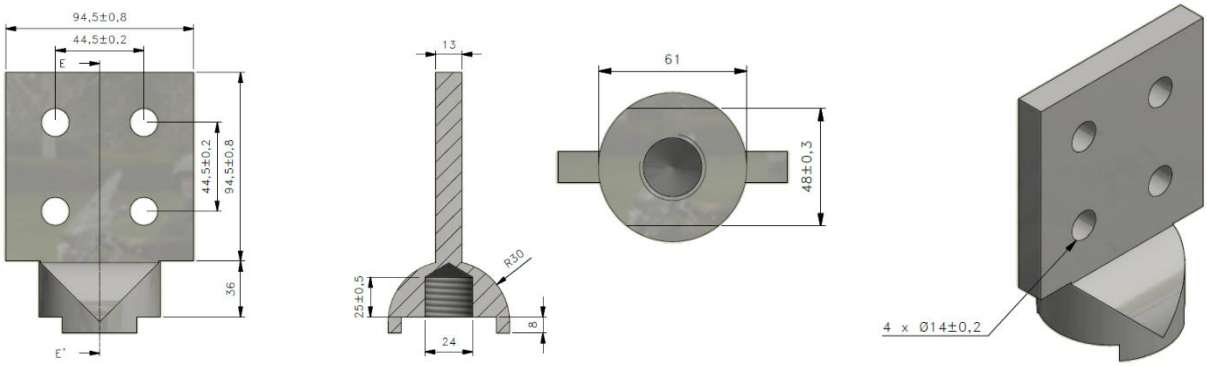

Figure D6 - LV terminal Blade connector (NEMA 4)

The LV bushing is considered to Enel Distribución Chile, for an indoor according to:

Capacity [kVA]	Enel Distribución
>160kVA and ≤1000kVA	Sol. 6

Table D3 – Indoor type of low voltage terminal connectors

For Enel Distribution Chile the LV bushing shall be located over the lid of transformer.

7.3.7 De-energized tap-changer for MV voltage regulation

7.3.8 De-energized tap-changer for MV voltage commutation

7.3.9 Supporting and sliding devices

7.3.9.1 Supporting

The fixing bracket for single-pole mounted transformer (weight ≤ 550 kg) shall be located in the LV side according to 7.10.

The pole mounting system must support the weight of the transformer.

For weights greater than 550 kg, the transformer is installed on 2 poles, therefore it should not include a pole mounting bracket.

7.3.9.2 Sliding devices

7.3.10 Protective painting

The color is RAL7038.

7.3.11 Accessories

7.3.11.1 Lifting and blocking devices

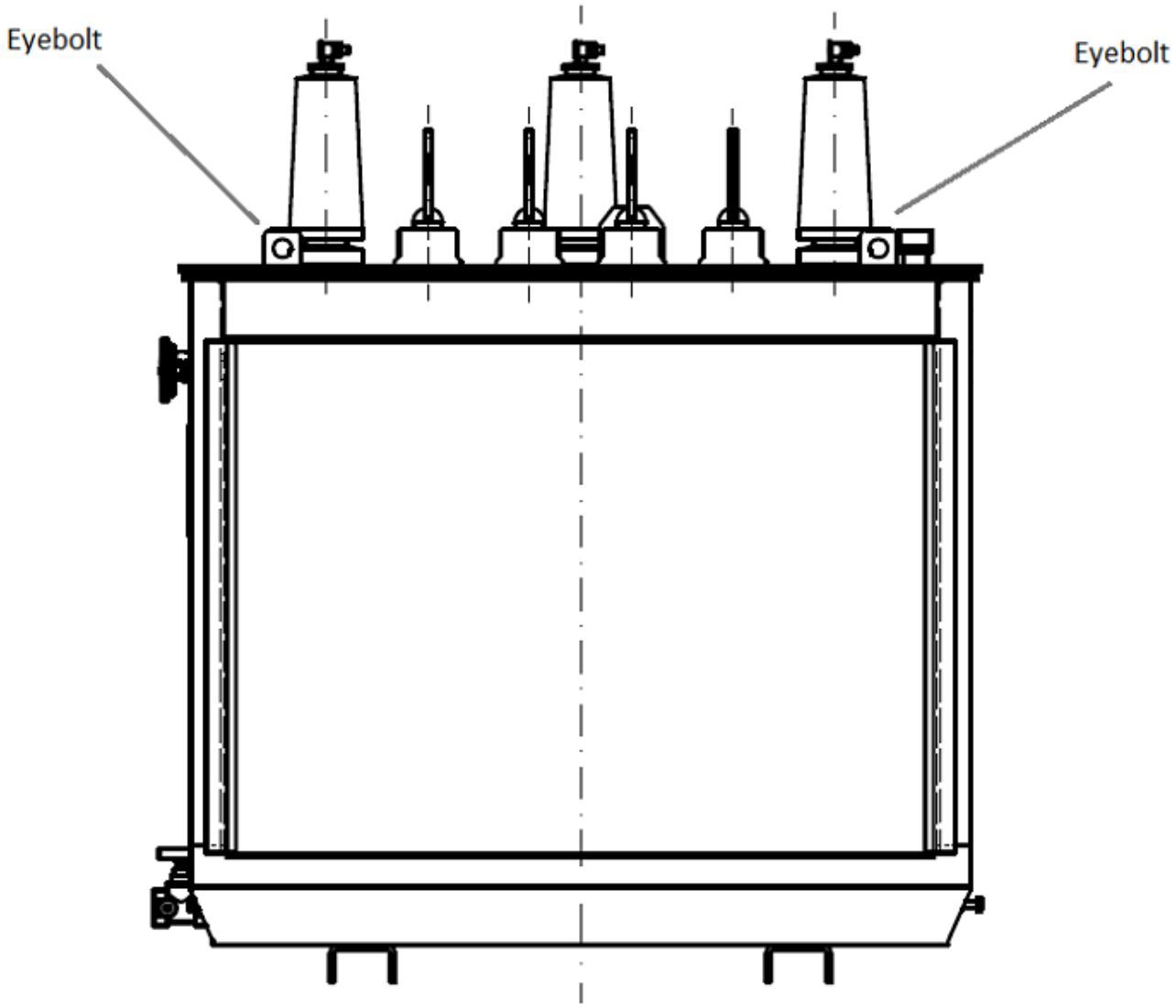

Figure D7 – Lifting and blocking devices

7.3.11.2 Liquid draining plug

7.3.11.3 Thermometer pocket

Required for all transformers.

7.3.11.4 Thermometer

7.3.11.5 Overpressure valve

For totally filled transformers this accessory will not be required.

For gas cushion transformers the over pressure valve is required for rated power ≥100 kVA.

7.3.11.6 Liquid level indicator

For totally filled transformers this accessory will not be required.

For gas cushion transformers the liquid level indicator is required for rated power ≥100 kVA.

7.3.11.7 Support for surge arresters

7.3.11.8 Earthing terminals

7.3.11.9 Rating plates and plate-holders

Additional to data requested in IEC standard must be added:

- Level noise;
- Losses;
- Winding material;
- Serial number;
- Purchase order number;
- Date of manufacture (Day, Month, Year);

Example of plate used is shown below:

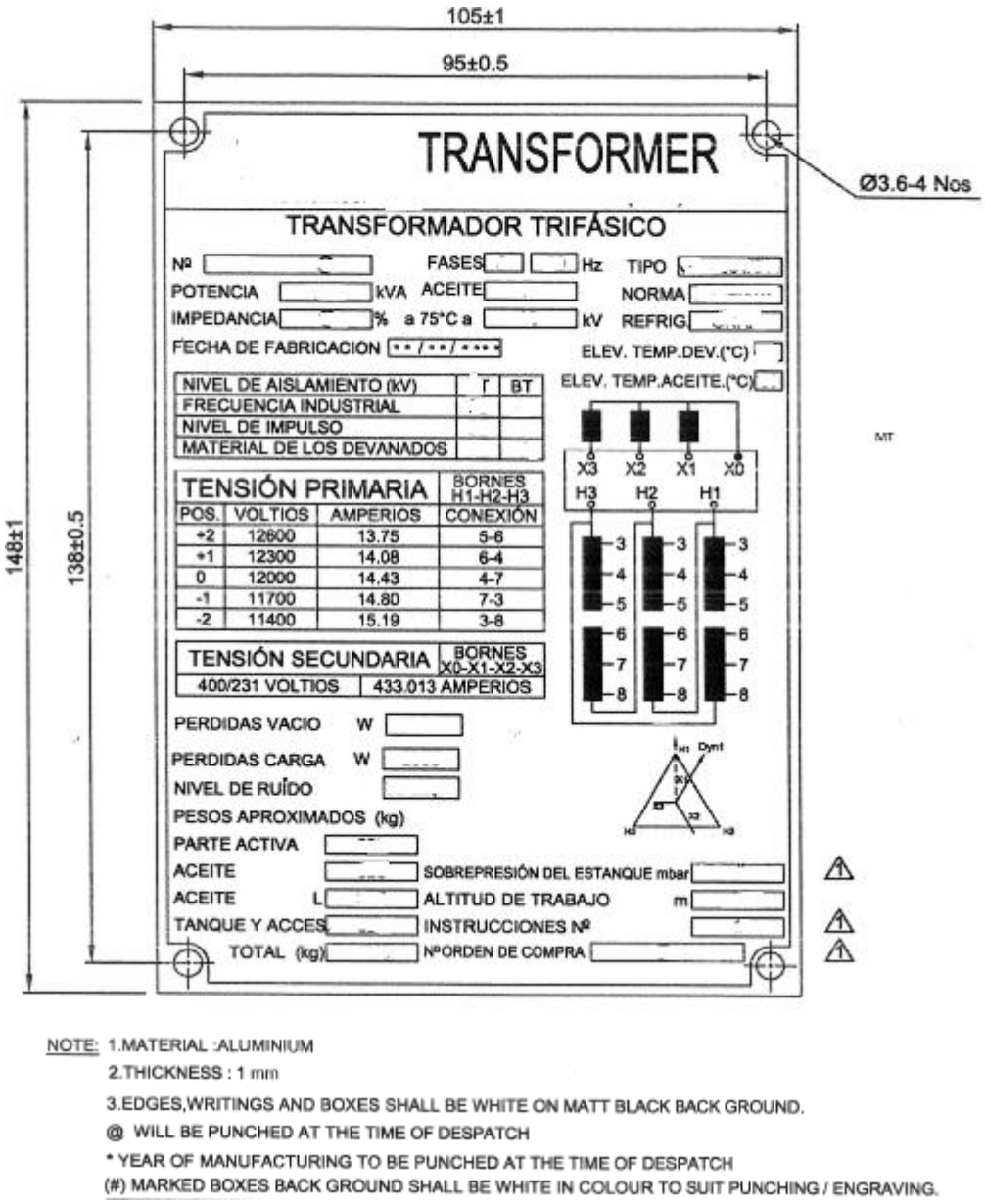

Figure D8 - Rating plate

7.3.11.10 Filling hole and plug (filling cap)

1” tube welded on the transformer cover and with screw-on cover.

Referential image. Overall dimension in mm.

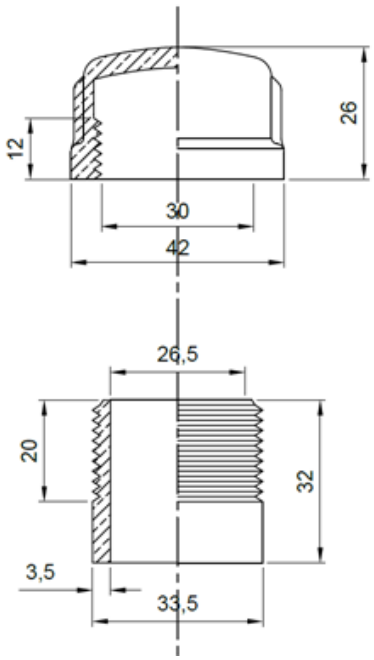

Figure D9 - Filling hole and plug

7.3.11.11 Protection device (e.s type DGPT)

7.3.12 Identification of accessories and components

7.4 Exceptions

7.5 Documentation

7.5.1 Document for the offer

7.5.2 Documentation for the technical conformity assessment (TCA)

7.5.2.1 Not-reserved documentation (Type A)

7.5.2.2 Reserved documentation (Type B)

7.5.3 Documents for delivering

7.6 Tests

7.6.1 List and classification of tests

7.6.1.1 Routine tests

7.6.1.2 Type tests

7.6.1.3 Type tests on accessories

7.6.1.4 Special tests

7.6.1.5 General statements for the tests

7.6.2 Tests description

7.6.2.1 Routine tests

7.6.2.2 Type tests

7.6.2.3 Type tests on accessories

7.6.2.4 Special tests

7.7 Guarantee

7.8 Transport and packing

7.9 Other local issues

7.10 Figures

a) Fixing support in single-pole (single-phase and two-phase transformer): The single-phase transformers must carry two clamping backpacks, whose construction detail shown in Figure D4.

The bottom of the tank must be isolated at least 50mm from the floor level.

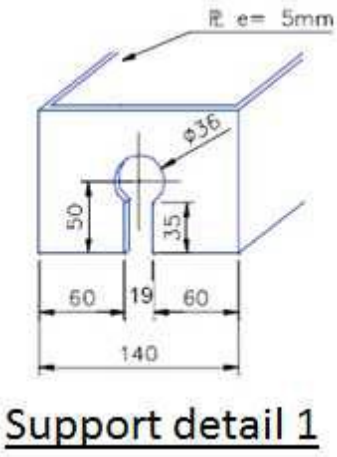

Figure D10 - Fixing support of single-phase and two-phase transformer

b) <u>Fixing support in single-pole (three-phase transformer up to 50 kVA):</u>

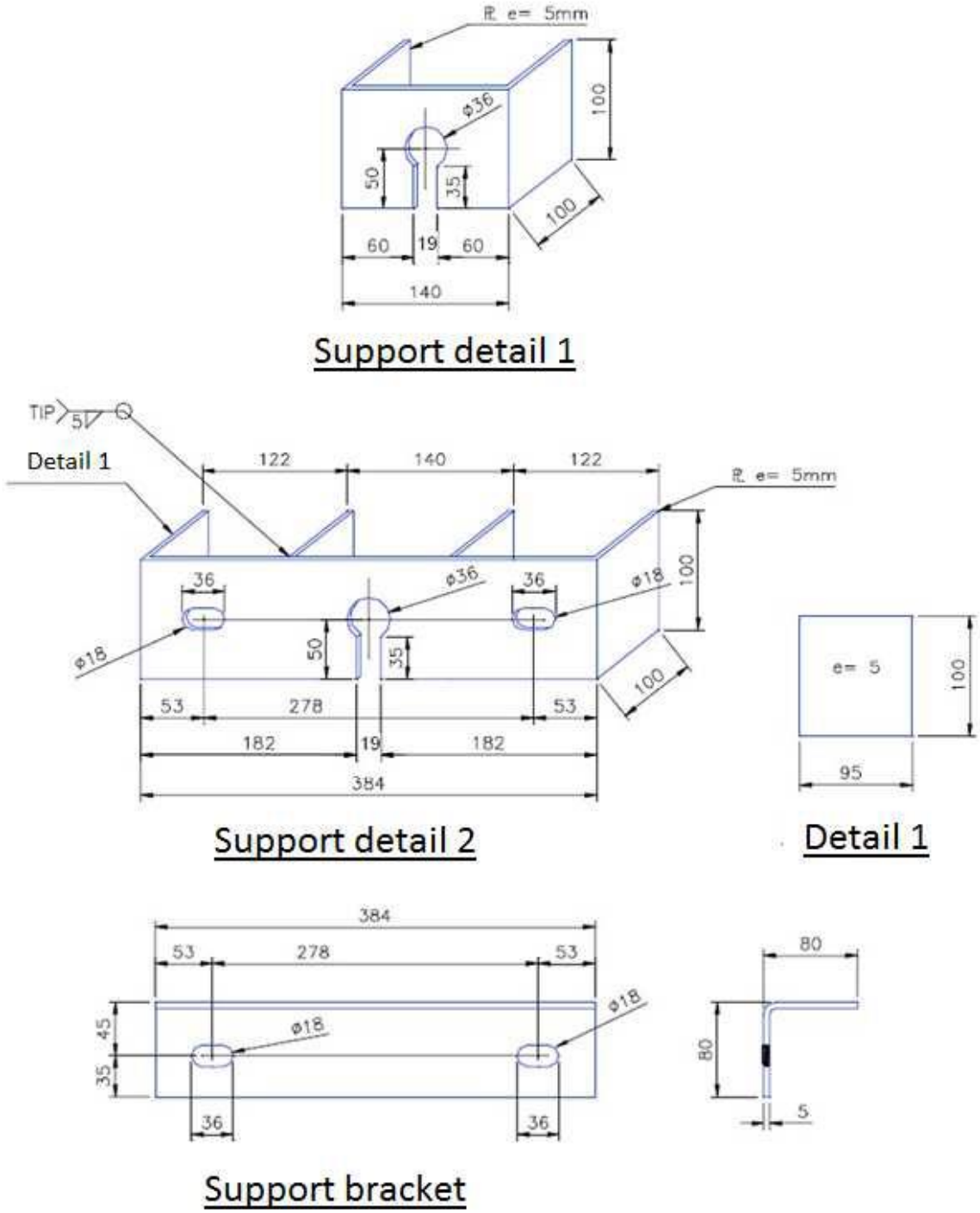

Figure D11 - Fixing support in single-pole of three-phase transformer up to 50 kVA

Support bracket, this is an item that must be installed in exceptional cases where the post holes

do not match with supports of the transformer.

c) Anchoring base Docking (three-phase transformers up to 50kVA):

- Transformers must incorporate an anchoring base, with two U-profiles, separating the pond bottom floor, at least at 50 mm. The design must conform to Figure D12;
- The profiles must come with holes spaced at 590mm between centers and measuring at least 690mm long;

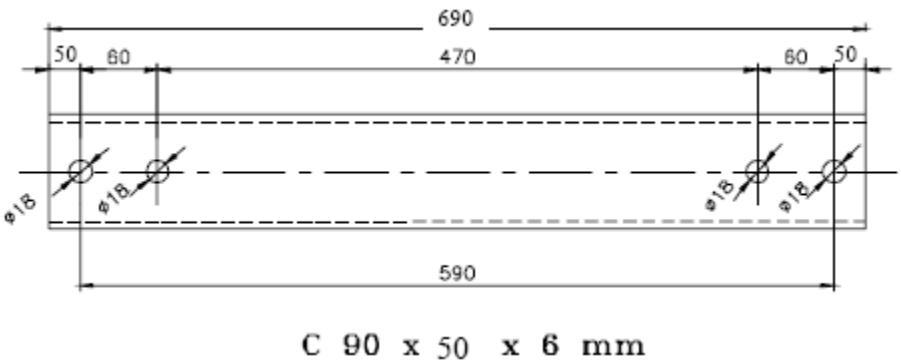

Figure D12 - Profile for anchoring base

d) Support for three-phase transformer greater than 50 kVA:

Anchoring base:

- Transformers must incorporate an anchoring base, with two U-profiles, separating the pond bottom floor, at least at 50 mm. The design must conform to Figure D13.
- The profiles must come with holes spaced at 590mm between centers and measuring at least 690mm long.

Anchoring base three-phase transformer greater than 50 kVA.

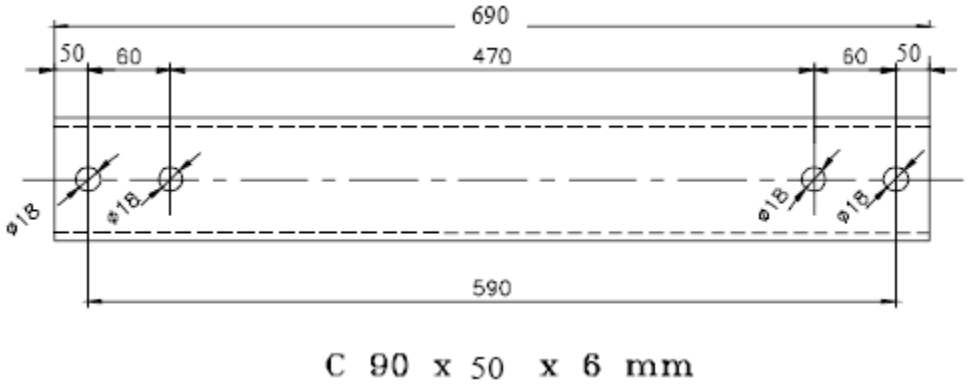

Figure D13 – Profile for anchoring base

e) <u>Specific requirements for transformers installed on two poles</u>:

For transformers installed on two poles, the distance shown in the following figure must be met:

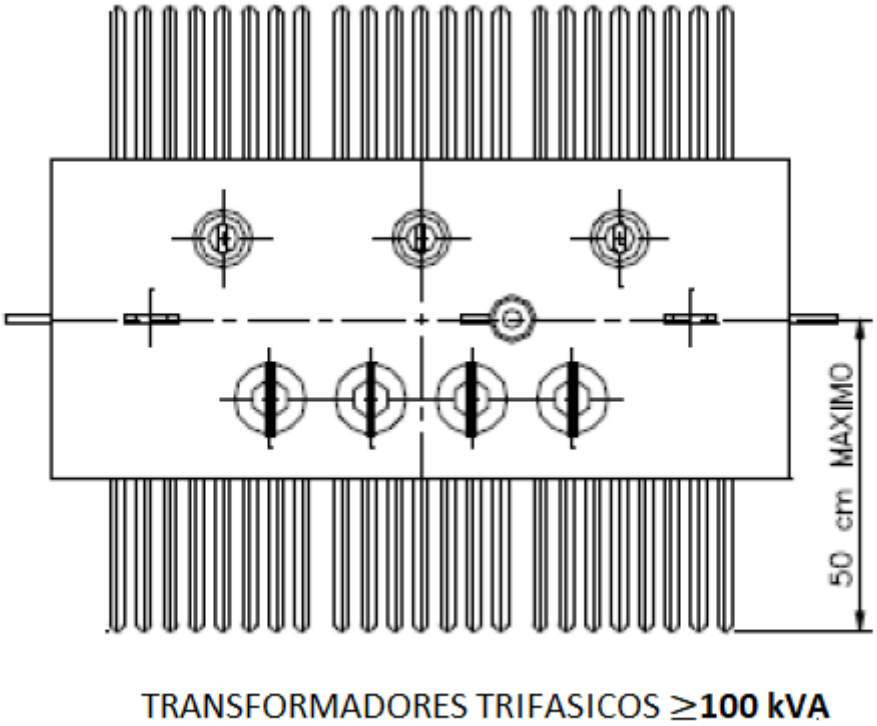

Figure D14 - Transformers installed on two poles

GST001 ANNEX E - COLOMBIA

CONTENTS

7 DESCRIPTION **116**

7.1 Service conditions 116

7.2 Ratings 116
7.2.1 Type of transformers 116
7.2.2 Number of windings 116
7.2.3 Number of phases 116
7.2.4 Cooling system 116
7.2.5 Rated power 116
7.2.6 Rated voltages 116
7.2.7 Rated frequency 116
7.2.8 Voltage regulation 116
7.2.9 Windings connections 116
7.2.10 Installation 116
7.2.11 Insulation levels 117
7.2.12 Losses, short circuit impedances and sound power levels 117
7.2.13 Temperature rise 117
7.2.14 Capability to withstand short-circuit 117
7.2.15 Overloading 117
7.2.16 Sound levels 117
7.2.17 Overall dimensions and layout 117
7.2.18 Rating plates 119
7.2.19 Tolerances 119

7.3 Design requirements 119
7.3.1 Core 119
7.3.2 Windings 119
7.3.3 Tank 119
7.3.4 Insulating liquid and material 119
7.3.5 Liquid insulating filling and sealing procedures 119
7.3.6 Bushings 119
7.3.7 De-energized tap-changer for MV voltage regulation 121
7.3.8 De-energized tap-changer for MV voltage commutation 121
7.3.9 Supporting and sliding devices 121
7.3.10 Protective painting 123
7.3.11 Accessories 123
7.3.12 Identification of accessories and components 126

7.4 Exceptions 126

7.5 Documentation 126
7.5.1 Document for the offer 126
7.5.2 Documentation for the technical conformity assessment (TCA) 126
7.5.3 Documents for delivering 126

7.6 Tests 126
7.6.1 List and classification of tests 126
7.6.2 Tests description 126

7.7 Guarantee 126

7.8 Transport and packing 126
7.9 Other local issues 126
7.10 Figures 126

7 DESCRIPTION

The scope of this Local Section is to integrate the Common Part in order to provide the technical standard requirements for the MV/LV transformers of Enel Colombia.

7.1 Service conditions

Altitude 2700 meters above sea level.

7.2 Ratings

7.2.1 Type of transformers

7.2.2 Number of windings

7.2.3 Number of phases

7.2.4 Cooling system

7.2.5 Rated power

Preferred Rated Powers shall be:

On Pole: 5, 15, 25, 50, 100, 160 kVA.

On two poles: 250 kVA.

Surface: 160, 250 and 400 kVA.

7.2.6 Rated voltages

Medium Voltage:

- 34,5 kV
- 11,4 kV
- 13,2 kV
- 11.4 kV / 13.2 kV.

Low Voltage:

- Transformer three-phase: 240 V
- Transformer bi-phase: 214 V

7.2.7 Rated frequency

7.2.8 Voltage regulation

7.2.9 Windings connections

7.2.10 Installation

All transformers require anchoring base to be used either single-pole, double pole or surface level.

Mounting System		
Single-pole	Double-pole	Surface level

≤160 kVA	160 kVA, 250 kVA	≥160 kVA

Table E1 - Installation

7.2.11 Insulation levels

For 11.4 kV and 13.2 kV, the Basic Insulation Level (BIL) shall be 125 kV.

For 34.5 kV the BIL shall be 210 kV.

7.2.12 Losses, short circuit impedances and sound power levels

7.2.13 Temperature rise

7.2.14 Capability to withstand short-circuit

7.2.15 Overloading

7.2.16 Sound levels

7.2.17 Overall dimensions and layout

See Common List TR MV/LV and Figure E1, E2 and E3 which define the maximum dimensions for the length, the width (depth) and the height of transformers and the layout of the main elements (bushings, supports, anchoring bases or wheels).

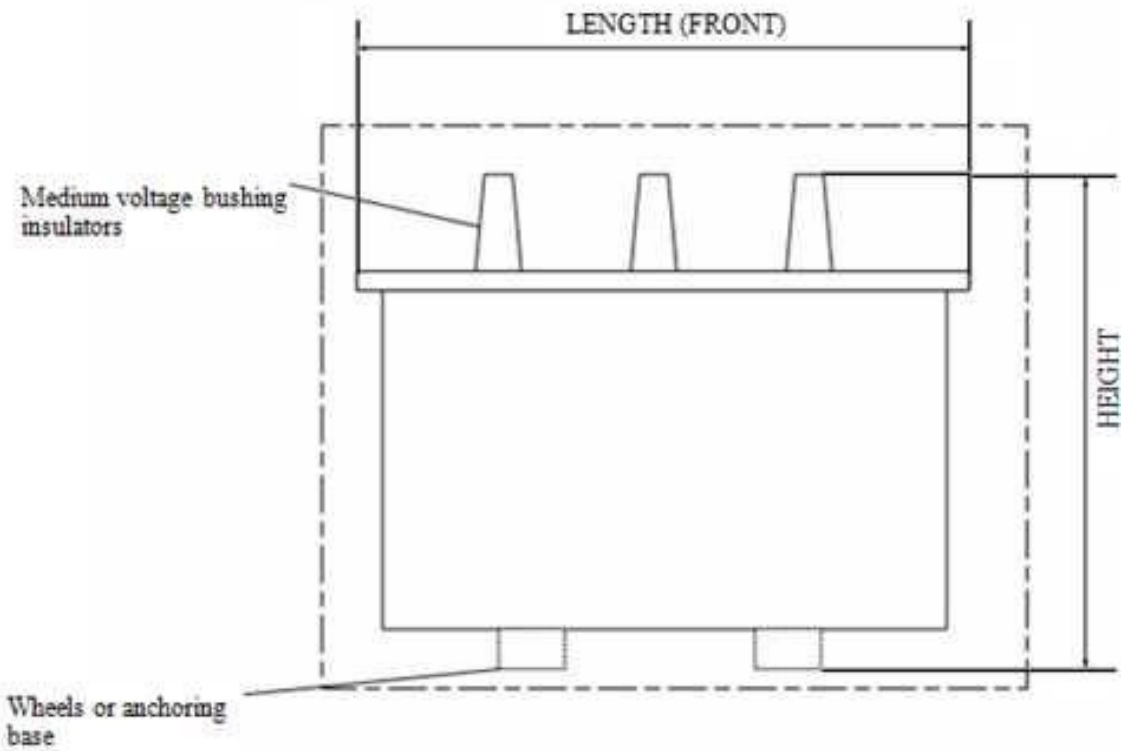

Figure E1 - Dimensions and layout of the main elements (Elevation)

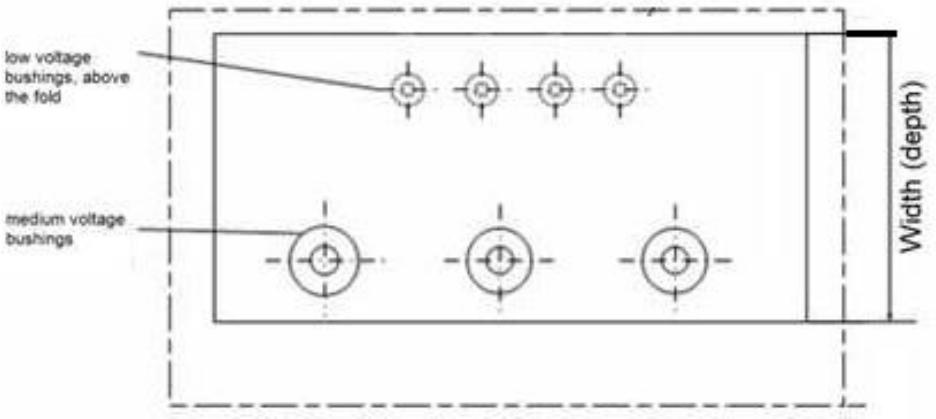

Figure E2 - Dimensions and layout of main elements (Top)

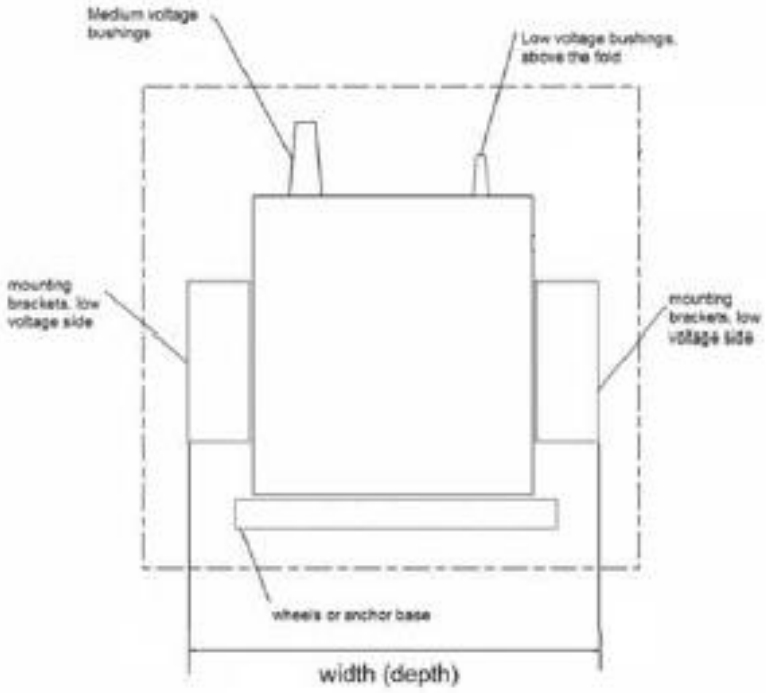

Figure E3 - Dimension and layout of the main elements (Side)

7.2.18 Rating plates

7.2.19 Tolerances

7.3 Design requirements

7.3.1 Core

7.3.2 Windings

7.3.3 Tank

7.3.4 Insulating liquid and material

7.3.5 Liquid insulating filling and sealing procedures

7.3.6 Bushings

The LV bushing considered for Colombia is the solution 6, 7 or 8 as IEC 60137 and will be located over the lid. As an exception for the monophasic transformers the LV bushings are allowed in the tank.

Capacity (kVA)	Colombia
< 75	Eyebolt connector
>= 75 < 400	Spade H connector
>= 400	Bus Bar

Figures from ANSI IEEE C57.12.20 ***Standard for Overhead-Type Distribution Transformers 500 kVA and Smaller: High Voltage, 34 500 V and Below; Low Voltage, 7970/13 800Y V and Below***:

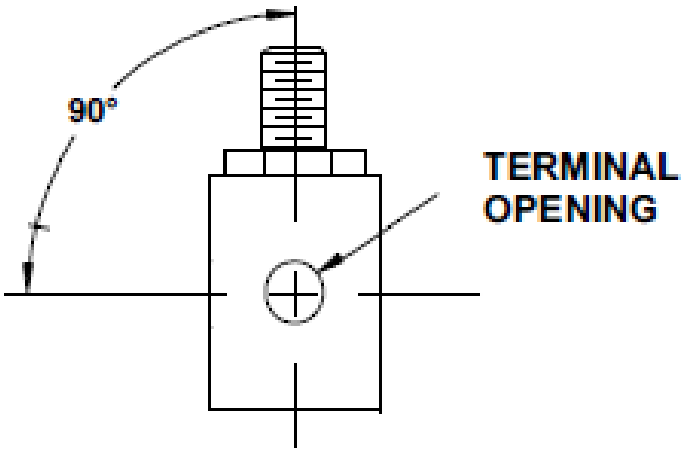

Figure E4 - Eyebolt connector

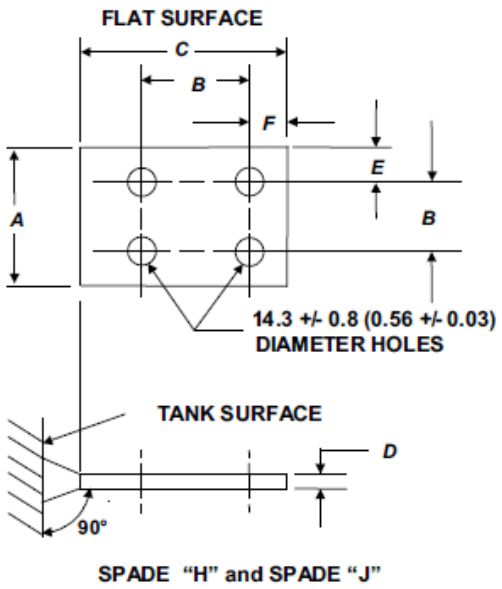

Dimensions	Spade H mm (in)	Spade J mm (in)
A	88.9 (3.50)	101.6 (4.00)
B	44.5 ± 0.8 (1.75 ± 0.03)	44.5 ± 0.8 (1.75 ± 0.03)
C min	85.7 (3.38)	114.3 (4.50)
D min	6.4 (0.25)	9.5 (0.38)
E	22.2 (0.88)	28.6 (1.13)
F	15.9 (0.63)	28.6 (1.13)

NOTE 1—Corners and edges may be rounded.

NOTE 2—Refer to Clause 7 for dimensions tolerances. All dimensions are in millimeters. Dimensions in parentheses are in inches.

Figure E5 - Spade H connector

Phase markings and identification

The sequence for each phase of the distribution transformer should be marked.

7.3.6.1 MV bushings

7.3.6.2 LV bushings

7.3.7 De-energized tap-changer for MV voltage regulation

7.3.8 De-energized tap-changer for MV voltage commutation

7.3.9 Supporting and sliding devices

7.3.9.1 Supporting

Below suggested image of the supports:

- Transformers with a maximum weight of 380 kg:

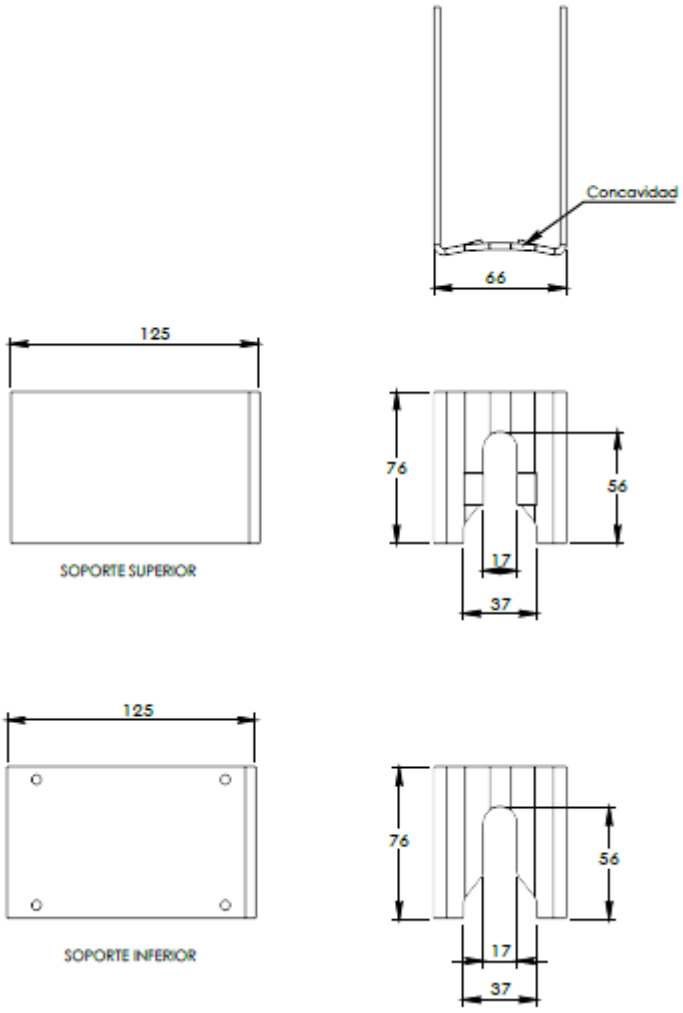

- Transformers with a weight range between 380 - 700 kg

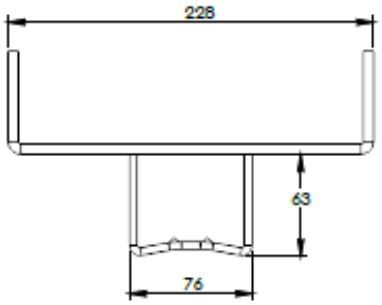

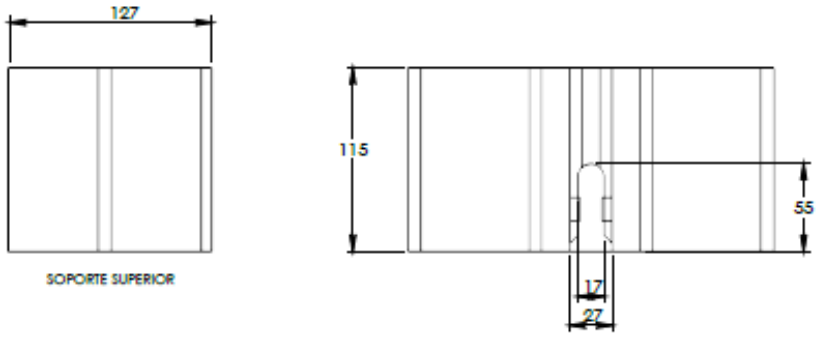

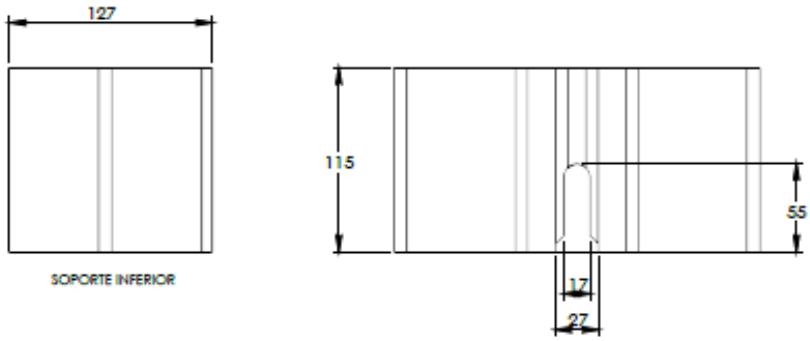

7.3.9.2 Sliding devices

Wheels are required for transformers equal and above 300 kVA. Below suggested image of the wheels.

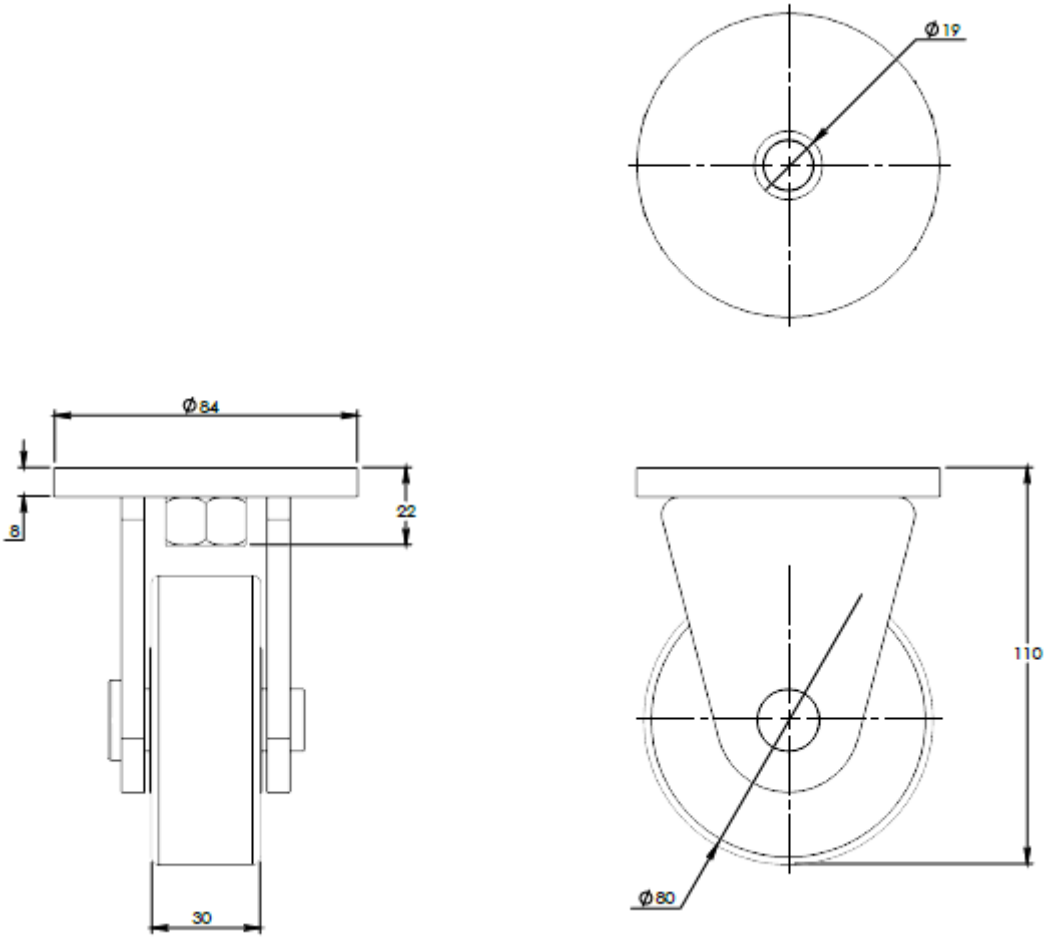

7.3.10 Protective painting

The color is RAL7038.

7.3.11 Accessories

7.3.11.1 Lifting and blocking devices

7.3.11.2 Liquid draining plug

7.3.11.3 Thermometer pocket

7.3.11.4 Thermometer

7.3.11.5 Overpressure valve

7.3.11.6 Liquid level indicator

For gas cushion transformers the over pressure valve is required for the following rated power:

Colombia ≥ 160 KVA.

7.3.11.7 Support for surge arresters

This accessory is required in Colombia.

The transformer must be provided of a support (one each phase) for the installation of medium voltage arresters according to the local specification for Support for surge arrester:

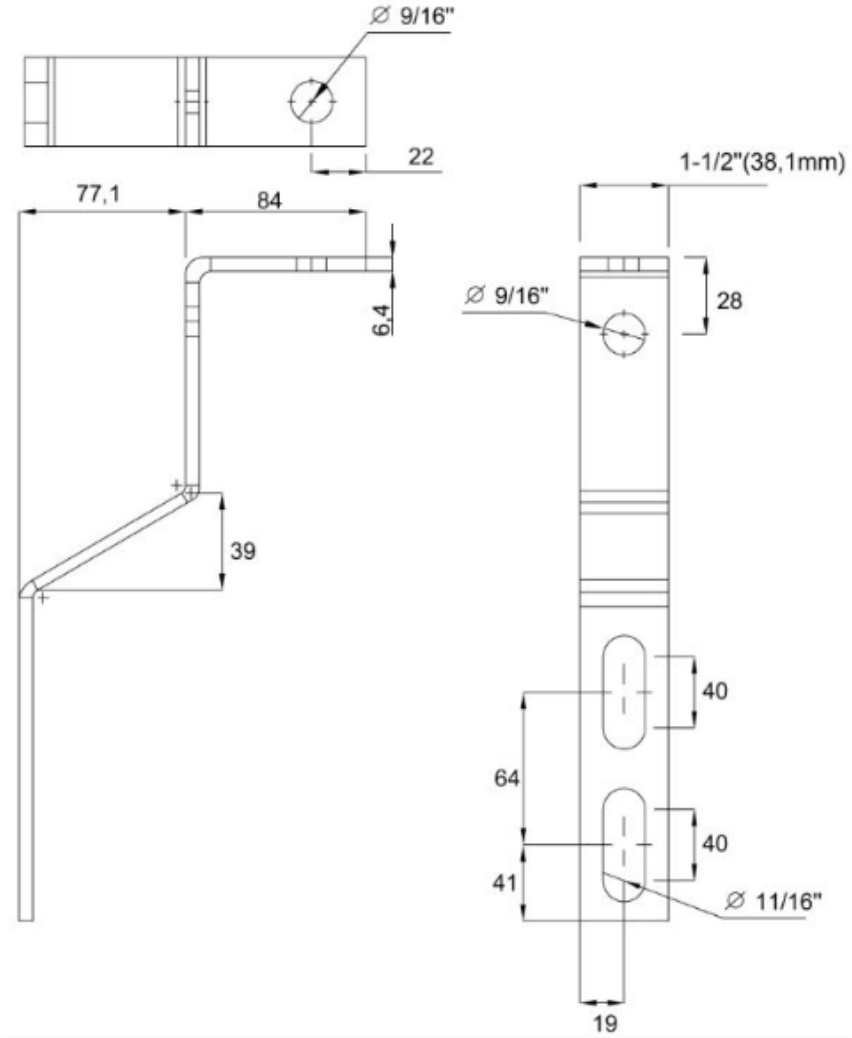

7.3.11.8 Earthing terminals

7.3.11.9 Rating plates and plate-holders

Additional to data requested in IEC standard must be added:

- ENEL Colombia
- Level noise

- Losses
- Winding material
- Serial number
- Purchase order number
- Date of manufacture (Day, Month, Year)

It is necessary to add to the rating plate the sign "Clasificación de acuerdo a 0222/2011: Grupo 4".

The tank must be painting with the notices following visible from floor:

- "NO PCB"
- "XX kVA"

For vegetable oil the tank must be painting with the notice "Aceite Vegetal" visible from floor.

Mark each phase in MV and LV minimum 35 mm height.

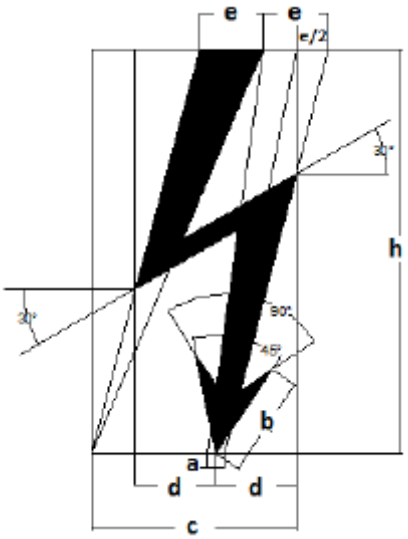

The tank shall have an electric hazard award like the next picture (from RETIE).

7.3.11.10 Filling hole and plug (filling cap)

7.3.11.11 Protection device (e.s type DGPT)

7.3.12 Identification of accessories and components

7.4 Exceptions

7.5 Documentation

7.5.1 Document for the offer

7.5.2 Documentation for the technical conformity assessment (TCA)

RETIE product conformity certificate.

7.5.2.1 Not-reserved documentation (Type A)

7.5.2.2 Reserved documentation (Type B)

7.5.3 Documents for delivering

RETIE product conformity certificate.

7.6 Tests

7.6.1 List and classification of tests

7.6.1.1 Routine tests

7.6.1.2 Type tests

7.6.1.3 Type tests on accessories

7.6.1.4 Special tests

7.6.1.5 General statements for the tests

7.6.2 Tests description

7.6.2.1 Routine tests

7.6.2.2 Type tests

7.6.2.3 Type tests on accessories

7.6.2.4 Special tests

7.7 Guarantee

7.8 Transport and packing

7.9 Other local issues

7.10 Figures

GST001 ANNEX F – IBERIA - SPAIN

CONTENTS

7 DESCRIPTION **129**

7.1 Service conditions ... 129

7.2 Ratings ... 129
7.2.1 Type of transformers ... 129
7.2.2 Number of windings ... 129
7.2.3 Number of phases ... 129
7.2.4 Cooling system ... 129
7.2.5 Rated power ... 129
7.2.6 Rated voltages ... 130
7.2.7 Rated frequency ... 130
7.2.8 Voltage regulation ... 130
7.2.9 Windings connections ... 130
7.2.10 Installation ... 130
7.2.11 Insulation levels ... 130
7.2.12 Losses, short circuit impedances and sound power levels ... 130
7.2.13 Temperature rise ... 130
7.2.14 Capability to withstand short-circuit ... 130
7.2.15 Overloading ... 130
7.2.16 Sound levels ... 130
7.2.17 Overall dimensions and layout ... 130
7.2.18 Rating plates ... 130
7.2.19 Tolerances ... 130

7.3 Design requirements ... 130
7.3.1 Core ... 130
7.3.2 Windings ... 130
7.3.3 Tank ... 130
7.3.4 Insulating liquid and material ... 130
7.3.5 Liquid insulating filling and sealing procedures ... 130
7.3.6 Bushings ... 130
7.3.7 De-energized tap-changer for MV voltage regulation ... 131
7.3.8 De-energized tap-changer for MV voltage commutation ... 131
7.3.9 Supporting and sliding devices ... 131
7.3.10 Protective painting ... 132
7.3.11 Accessories ... 133
7.3.12 Identification of accessories and components ... 136

7.4 Exceptions ... 136

7.5 Documentation ... 136
7.5.1 Document for the offer ... 136
7.5.2 Documentation for the technical conformity assessment (TCA) ... 136
7.5.3 Documents for delivering ... 136

7.6 Tests ... 136
7.6.1 List and classification of tests ... 136
7.6.2 Tests description ... 138

7.7 Guarantee ... 138

7.8 Transport and packing 138
7.9 Other local issues 138
7.10 Figures 138

7 DESCRIPTION

The scope of this Local Section is to integrate the Common Part in order to provide the technical standard requirements for the MV/LV transformers of E-distribucion.

7.1 Service conditions

7.2 Ratings

7.2.1 Type of transformers

The transformers shall be of one of the following classes:

- Class B2 transformers: the no-load rated voltage of these transformers is 420 V phase-to-phase;
- Class B1B2 transformers: Designed to simultaneously feed 242 V and 420 V networks, with a neutral common to both, with reduced load at the voltage of 242 V, and full rated load in that of 420 V (section 5.4). The no-load rated voltages of these transformers are 242 V and 420 V in their corresponding terminals.

  The 242 V voltage must be obtained with a tapping in the 420 V winding.

For other characteristics see List of components.

7.2.2 Number of windings

7.2.3 Number of phases

7.2.4 Cooling system

7.2.5 Rated power

In class B1B2 transformers, the rated power (Pr) will be that fixed for its total use at 420 V and will have the following distribution formula:

$$P_1/K+P_2=P_r$$

with:

Pr = rated power of the transformer

P1 = required power for 242 V

P2 = required power for 420 V

K = 0.75 guaranteed by the manufacturer (for Pr ≤ 630 kVA)

K = 1 guaranteed by the manufacturer (for Pr = 1000 kVA)

7.2.6 Rated voltages

7.2.7 Rated frequency

7.2.8 Voltage regulation

7.2.9 Windings connections

7.2.10 Installation

7.2.11 Insulation levels

7.2.12 Losses, short circuit impedances and sound power levels

See List of Components.

7.2.13 Temperature rise

7.2.14 Capability to withstand short-circuit

7.2.15 Overloading

7.2.16 Sound levels

7.2.17 Overall dimensions and layout

7.2.18 Rating plates

7.2.19 Tolerances

7.3 Design requirements

7.3.1 Core

7.3.2 Windings

7.3.3 Tank

7.3.4 Insulating liquid and material

The maximal oil quantities are indicated in the following table:

Transformers	≤ 250 kVA	> 250 kVA
Max oil quantities	400 liters	600 liters

For rated power > 1000kVA oil quantity higher than 600 liters can be agreed.

7.3.5 Liquid insulating filling and sealing procedures

7.3.6 Bushings

Looking at the transformer from the low voltage side, the low voltage bushings are designated from right to left, by the following symbols:

N - 2U - 2V - 2W

The symbol N corresponds to the neutral bushing.

Looking at the transformer from the high voltage side, the high voltage bushings are designated from left to right by the following symbols:

1U - 1V - 1W

For the class B1B2 transformers, the low voltage bushing symbols are as following:

Looking at the transformer from the low voltage side, the low voltage bushings are designated from right to left by the following symbols:

N - 2U - 2V - 2W - 3U - 3V - 3W

The symbol N corresponds to the neutral bushing

The symbols 2U, 2V and 2W correspond to the bushing at 420 V.

The symbols 3U, 3V and 3W correspond to the bushing at 242 V.

The symbols, which will be perfectly visible, must be located and marked on the tank cover indelibly, in relief and with a minimum size of 30 mm.

The transformers (B1B2) with Type 3, Type 4, Type 5 and Type 6 LV bushings will be supplied with the corresponding flat coupling part.

7.3.6.1 MV bushings

7.3.6.2 LV bushings

7.3.7 De-energized tap-changer for MV voltage regulation

7.3.8 De-energized tap-changer for MV voltage commutation

7.3.9 Supporting and sliding devices

7.3.9.1 Supporting

The transformers of 50, 100 and 160 kVA will have a suspension device solidly joined (welded or screwed) to the tank for its mounting on a pole in accordance with Figure F1:

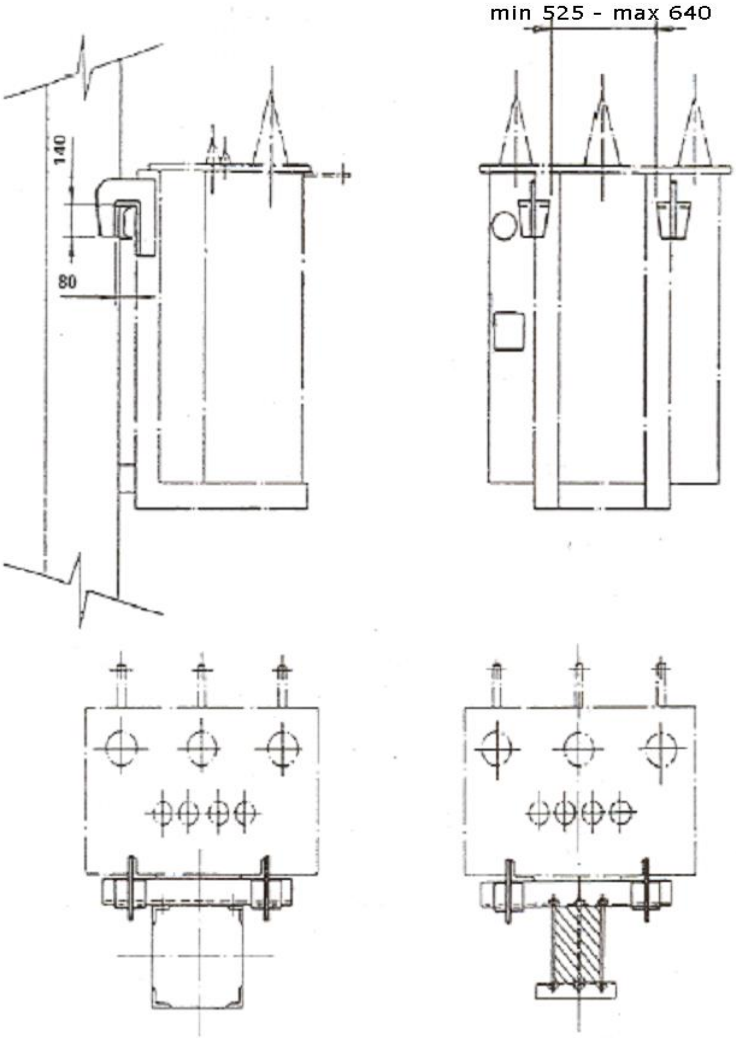

Figure F1 - Suspension device

NOTE – All the dimensions are in mm.

7.3.9.2 Sliding devices

All transformers, except 50 and 100 kVA rated power, are equipped with wheels without flanges, adjustable, in two perpendicular directions, for longitudinal and transversal displacements.

The dimensions of the wheels and the distances between shafts are those indicated in IEC 60076-22.

7.3.10 Protective painting

The color of the external painting shall be type S 8010-R90B as described in UNE 48103 Standard. The equivalent color of RAL 840-HR is RAL 5008.

7.3.11 Accessories

7.3.11.1 Lifting and blocking devices

7.3.11.2 Liquid draining plug

7.3.11.3 Thermometer pocket

The thermometer will be installed at source by the manufacturer in the supply of the followings transformers:

250 – 400 – 630 – 1000 kVA

The type and model of thermometer to be installed in these transformers is indicated in the ENDESA Technical Specification 710256.

7.3.11.4 Thermometer

7.3.11.5 Overpressure valve

7.3.11.6 Liquid level indicator

7.3.11.7 Support for surge arresters

The transformers of 50, 100 and 160 kVA will have support for surge arresters in accordance with the following Figure F2.

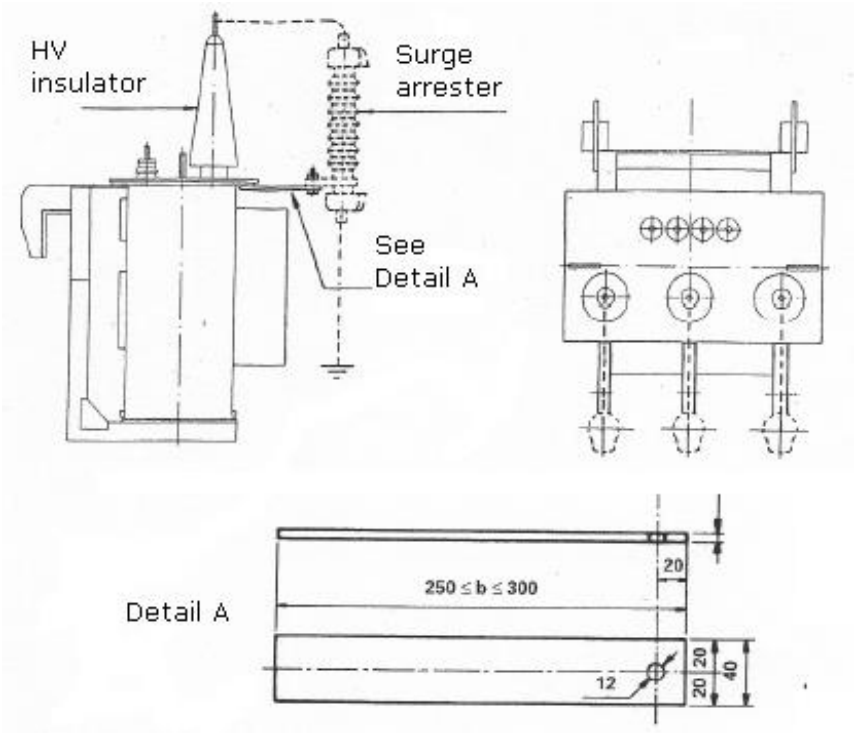

Figure F2- Supports for surge arresters

7.3.11.8 Earthing terminals

See chapter 5.2 of UNE 21428-1 for number and placement of earthing terminals. See chapter 5.2 of UNE 21428-1 for number and placement of earthing terminals.

7.3.11.9 Rating plates and plate-holders

All transformers must have a rating plate, ready to be easily set at both longer sides of the transformer and for that purpose, adequate support shall be placed.

The contents, layout, dimensions and materials shall be as indicated in the following figures:

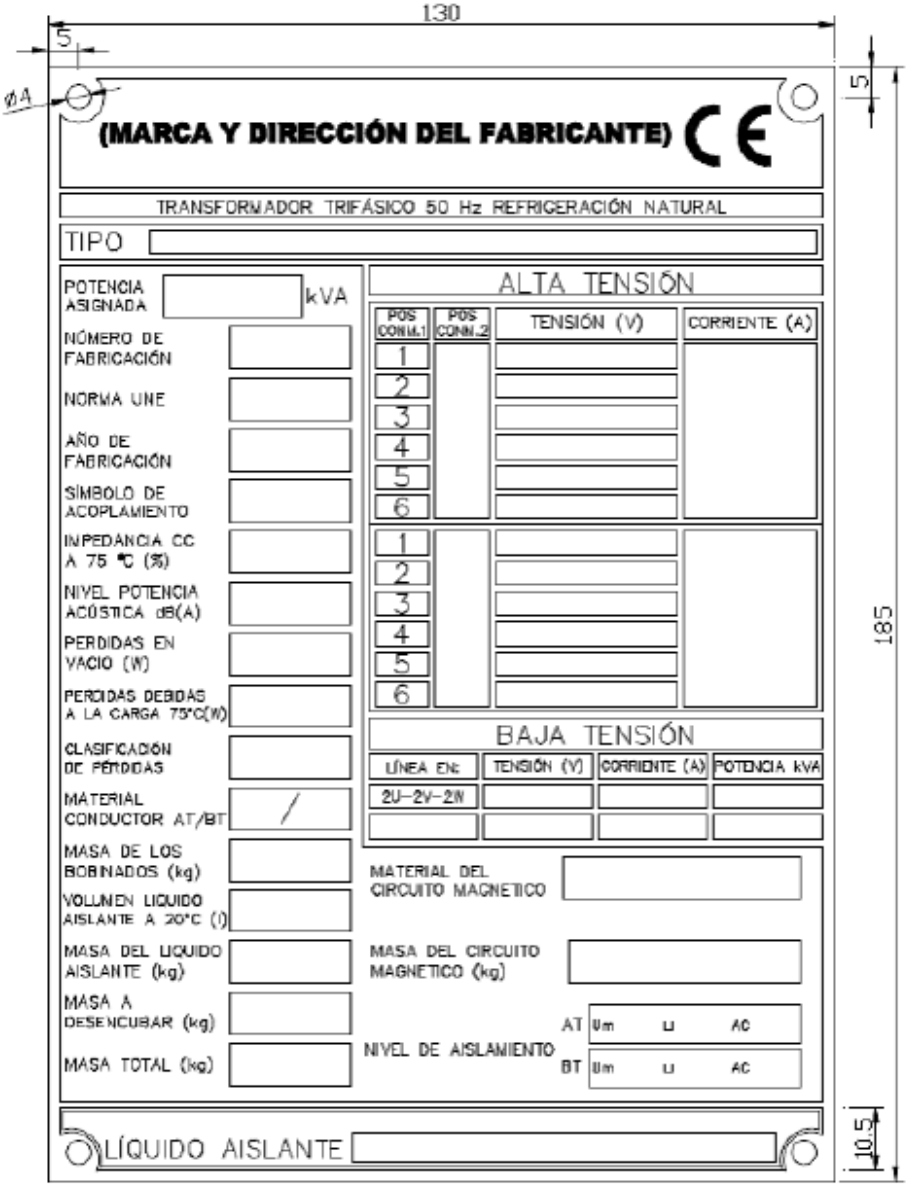

Figure F3- Rating plate

NOTE:

- All the letters in bas and/or high relief
- Material: Stainless Steel
- Thickness: 0,8 mm
- Tolerances: ±0,5 mm

The field “TIPO” shall be engraved as follows:

a) a number indicating the rated power followed by the letter I indicating the hermetically sealed liquid-immersed type.

b) a number indicating the highest voltage for the material (12, 24 or 36 kV)

The two previous numbers are separated by a slash

c) a number or numbers separated by a dash, indicating the rated primary voltages in kV. It follows a) and b) and separated from them by a slash

d) the class (B2 or B1B2)

e) the reference to this Standard

f) Code assigned by the Manufacturer to each series of identical units, in brackets.

Example: 630I/24/9.5-16.4B1B2-GST001 r.03 *(“Code assigned”*)

The K factors of the dual secondary voltage transformers can be identified by plates of 105 x 40 mm, white, with the identification K = 0.75 or K = 1, in black characters with a minimum height of 30 mm, mounted on the rating plate supports.

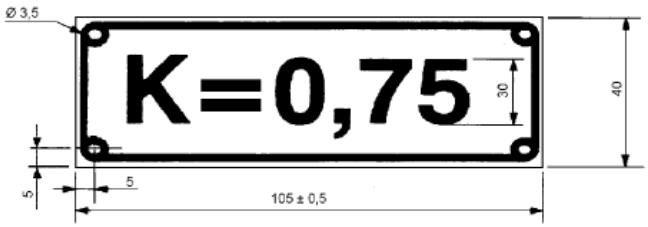

Figure F4– K factor plate

In order to differentiate the transformers built in accordance with this standard from the ones before 2008, the following marking is established:

Yellow rectangular plates 105 x 40 mm, fastened to the lower part of the rating plate supports, indicating "420 V" in black characters with a minimum height of 30 mm.

7.3.11.10 Filling hole and plug (filling cap)

The filling cap shall be placed on the cover of the tank in the opposite side of the oil draining device and shall be compliant with IEC 60076-22 and UNE 21428-1. The shape and dimensions are indicated in the Figure F5:

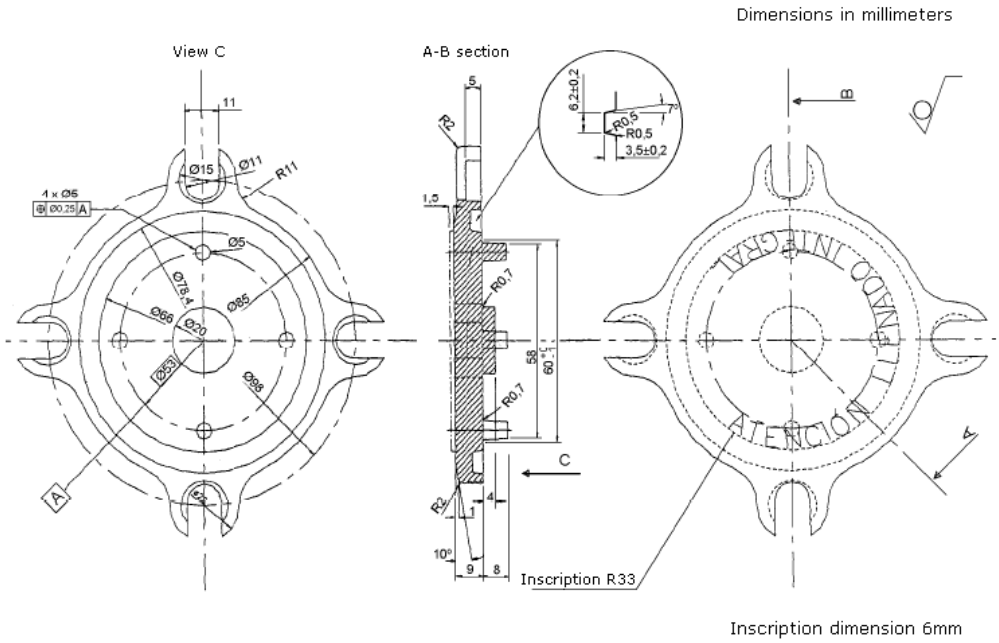

Figure F5- Filling cap

7.3.11.11 Protection device (e.s type DGPT)

7.3.12 Identification of accessories and components

7.4 Exceptions

7.5 Documentation

7.5.1 Document for the offer

7.5.2 Documentation for the technical conformity assessment (TCA)

7.5.2.1 Not-reserved documentation (Type A)

7.5.2.2 Reserved documentation (Type B)

7.5.3 Documents for delivering

7.6 Tests

7.6.1 List and classification of tests

7.6.1.1 Routine tests

For Low Voltage windings the short duration induced and separated source AC withstand voltage should be 10 kV and the lightning impulse withstand voltage should be 20 kV.

The impulse voltage should be applied between the low voltage terminals (all terminals connected together) and the tank, the medium voltage terminals being connected together and grounded directly or through an impedance.

7.6.1.2 Type tests

7.6.1.3 Type tests on accessories

7.6.1.4 Special tests

7.6.1.5 General statements for the tests

7.6.1.5.1 Criteria for routine tests

The Manufacturer shall prepare a test report, as indicated in document UNE 207019 IN, containing the results of the tests.

7.6.1.5.2 Criteria for type and special tests

In case of several transformers belong to the same family, it is possible to perform type or special test according to GSCG002 7.6.1 a) or b) on only one transformer, (key code), provided that all transformers are made using the same technology.

- Family 1: Transformers with Um= 24 kV and rated power between 50 and 250 kVA, both included; key code GST001/1227 (20 kV 160 kVA).
- Family 2: Transformers with Um= 24 kV and rated power between 400 y 1000 kVA both included; key code GST0001/1281 (20 kV 630 kVA).
- Family 3: Transformers with Um= 36 kV and rated power between 50 y 250 kVA both included; key code GST001/1231 (25 kV 160 kVA).
- Family 4: Transformers with Um= 36 kV and rated power between 400 y 1000 kVA both included; key code GST001/1285 (25 kV 630 kVA).
- Family 5: Transformers with Um<=36 kV and rated power between 400 and 630 kVA, and natural ester as isolating liquid; key code GST001/1281N (20 kV 630 kVA).
- Family 6: Transformers with Um<= 36 kV and rated power between 50 and 250 kVA, and natural ester as isolating liquid; key code GST001/1234N (15,4-20 160 kVA).
- Family 7: Transformers with Um<=36 kV and rated power 1000 kVA, and natural ester as isolating liquid; key code GST001/1299N (25 kV 1000 kVA).

For other transformers, the manufacturer must demonstrate that the constructive method allows to extend the validity of the above tests to the rest of the range or if additional testing is required.

In any case, for the extension of the Technical Conformity Assessment the tests shall be performed according to GSCG002 7.6.1 c).

7.6.2 Tests description

7.6.2.1 Routine tests

7.6.2.2 Type tests

7.6.2.3 Type tests on accessories

7.6.2.4 Special tests

7.7 Guarantee

7.8 Transport and packing

7.9 Other local issues

7.10 Figures

GST001 ANNEX G – ITALY

CONTENTS

7 DESCRIPTION **141**

7.1 Service conditions 141

7.2 Ratings 141
7.2.1 Type of transformers 141
7.2.2 Number of windings 141
7.2.3 Number of phases 141
7.2.4 Cooling system 141
7.2.5 Rated power 141
7.2.6 Rated voltages 141
7.2.7 Rated frequency 141
7.2.8 Voltage regulation 141
7.2.9 Windings connections 141
7.2.10 Installation 141
7.2.11 Insulation levels 141
7.2.12 Losses, short circuit impedances and sound power levels 141
7.2.13 Temperature rise 142
7.2.14 Capability to withstand short-circuit 142
7.2.15 Overloading 142
7.2.16 Sound levels 142
7.2.17 Overall dimensions and layout 142
7.2.18 Rating plates 147
7.2.19 Tolerances 147

7.3 Design requirements 147
7.3.1 Core 147
7.3.2 Windings 147
7.3.3 Tank 147
7.3.4 Insulating liquid and material 147
7.3.5 Liquid insulating filling and sealing procedures 150
7.3.6 Bushings 150
7.3.7 De-energized tap-changer for MV voltage regulation 151
7.3.8 De-energized tap-changer for MV voltage commutation 151
7.3.9 Supporting and sliding devices 151
7.3.10 Protective painting 153
7.3.11 Accessories 153
7.3.12 Identification of accessories and components 159

7.4 Exceptions 159

7.5 Documentation 159
7.5.1 Document for the offer 159
7.5.2 Documentation for the technical conformity assessment (TCA) 159
7.5.3 Documents for delivering 159

7.6 Tests 159
7.6.1 List and classification of tests 159
7.6.2 Tests description 160

7.7 Guarantee 161

7.8 Transport and packing 161
7.9 Other local issues 161
7.10 Figures 161

7 DESCRIPTION

The scope of this Local Section is to integrate the Common Part in order to provide the technical standard requirements for the MV/LV transformers of E-distribuzione.

7.1 Service conditions

7.2 Ratings

7.2.1 Type of transformers

7.2.2 Number of windings

For MV/0,900/0,420 kV transformers: three

7.2.3 Number of phases

7.2.4 Cooling system

7.2.5 Rated power

For transformers with two secondary windings (MV/0,900/0,420 kV), the rated power for sizing is indicated in the List of Components and simultaneous operation of MV/0.900 kV and MV/0.420 kV is provided.

7.2.6 Rated voltages

7.2.7 Rated frequency

7.2.8 Voltage regulation

For “0,900/0,420 kV and 0,420/0,900 kV transformers”: for voltage regulation a tolerance of ± 1% is allowed.

7.2.9 Windings connections

7.2.10 Installation

Outdoor/indoor (25-50-100-160 kVA)
Indoor (250-400-630 kVA)

7.2.11 Insulation levels

7.2.12 Losses, short circuit impedances and sound power levels

For transformers with two primary voltages (20-10 kV), the prescribed rated powers and loss values are referred to both rated voltages.

For transformers with two primary voltage (20-8,4 kV) and two secondary voltage (0,420-0,242 kV), the values are referred to the following conditions:

- Rated power 160, 250 e 400 kVA:
    - 4% configuration 20/0,420 kV, reffered to rated power;
    - 4,5% configuration 8,4/0,420 kV, reffered to ratedpower;
    - 2,8% (tol. -0/+10%) in the condition 0,242 kV, reffered to 75% of rated power.
- Rated power 630 kVA:

- 6% configuration 20/0,420 kV, reffered to rated power;
- 6,2% configuration 8,4/0,420 kV, reffered to ratedpower;
- 4,2% (tol. -0/+10%) nella in the condition 0,242 kV, reffered to 75% of rated power.

For transformers with two secondary windings MT/0,900/0,420 kV, the short circuit impedances is referred to rated power of single winding (0,900 kV and 0,420 kV).

A tolerance of + 10% / - 20% is allowed for the short-circuit impedance, referred to lower power.

7.2.13 Temperature rise

7.2.14 Capability to withstand short-circuit

7.2.15 Overloading

7.2.16 Sound levels

7.2.17 Overall dimensions and layout

The overall dimensions are in table of the List of components MV/LV transformers. The position of the fittings (bushings, eyebolts, etc.) placed on the transformer cover, are described in Figure G1 and Table G1.

Application Areas
Perimeter: *Global*
Staff Function: -
Service Function: -
Business Line: *Enel Grids*

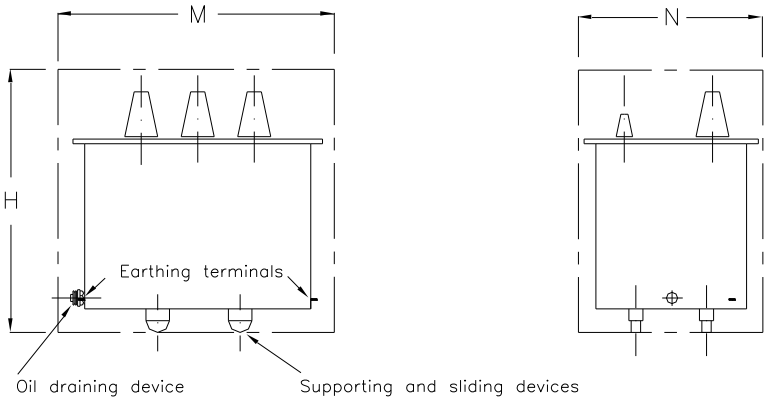

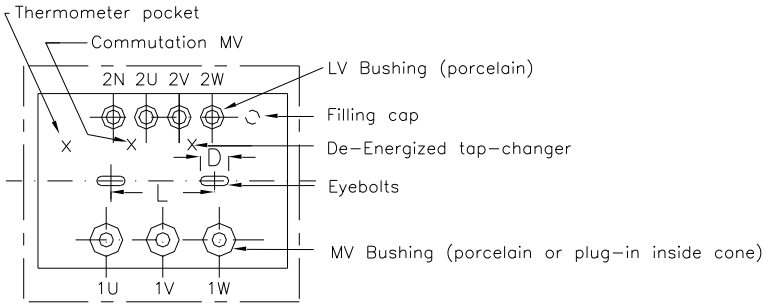

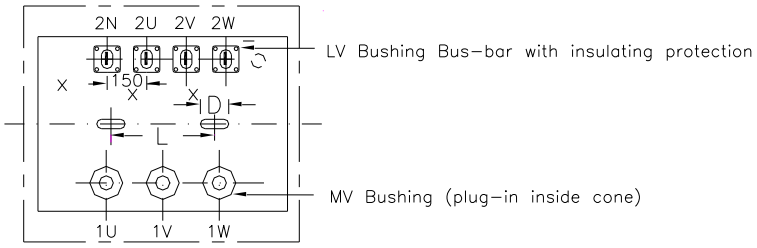

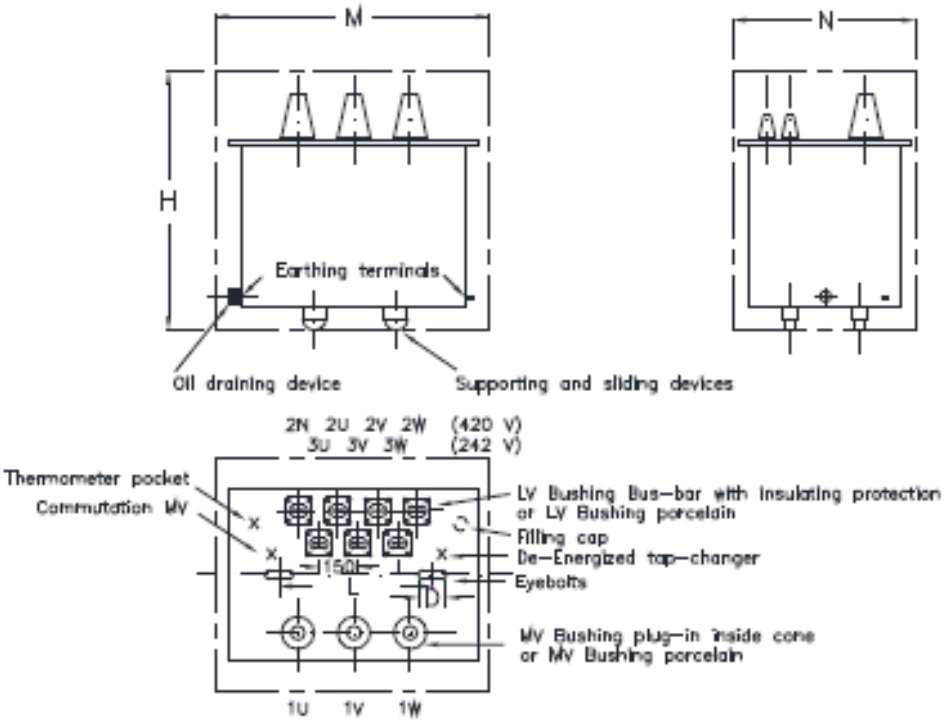

"*20-8,4/0,420-0,242 kV transformers*"

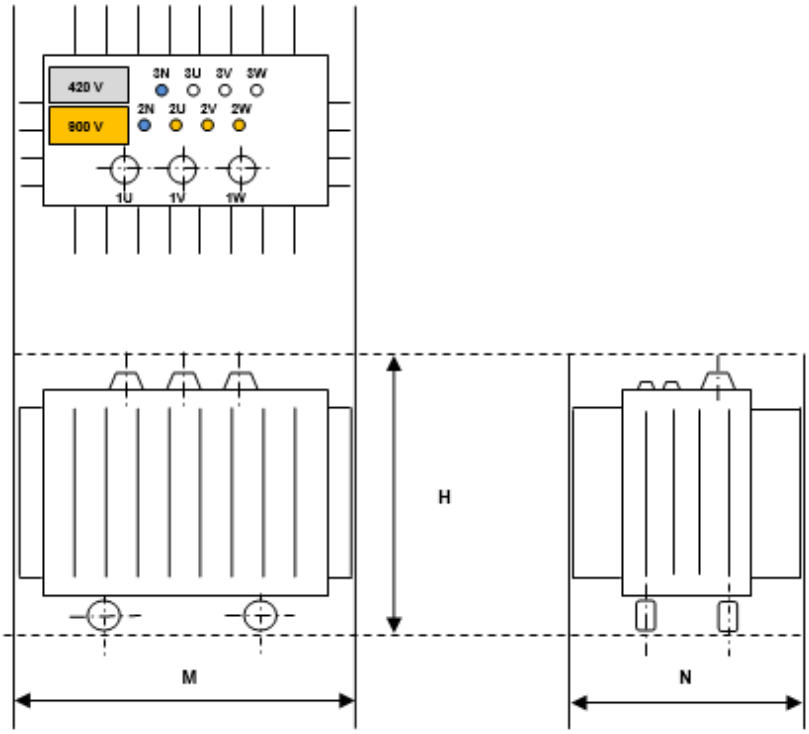

"*MT/0,900/0,420 kV transformers*"

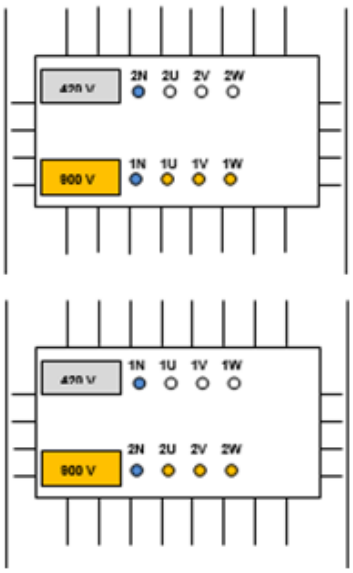

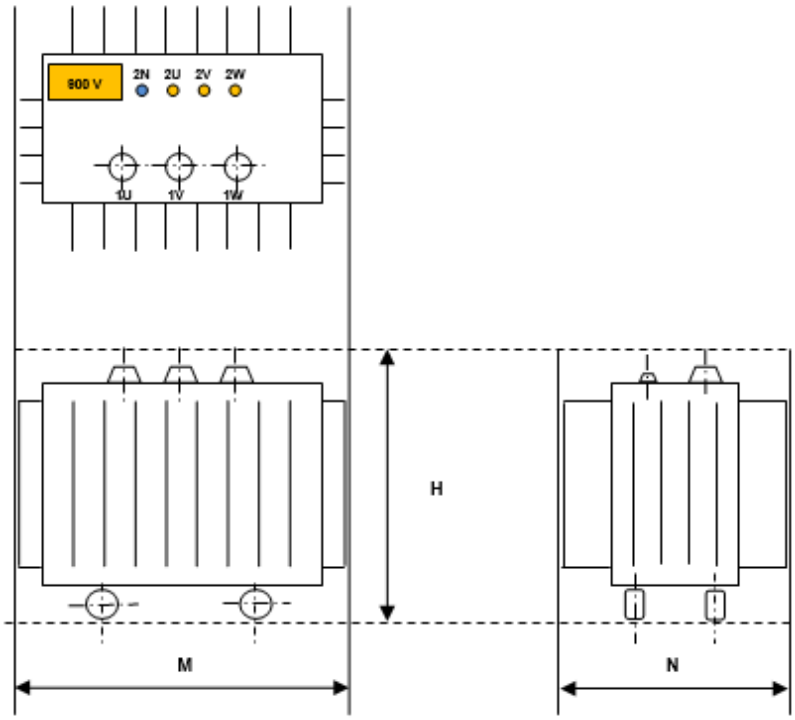

"*MT/0,900 kV, 0,900/0,420 kV and 0,420/0,900 kV transformers*"

Figure G1 - Overall dimensions and layout

EYEBOLTS

Rated power (kVA)	Internal diameter eyebolts D (mm)	Minimum interaxis distance between eyebolts L (mm)	Maximum interaxis distance between eyebolts L (mm)
25	60	280	- 1.000 mm, for transformers up to 2000 kg - 1.200 mm, for transformers above 2000 kg
50	60	280	
100	60	300	
160	60	300	
250	60	360	
400	60	400	
630	60	400	

Table G1 – Eyebolts: diameter dimensions and interaxis

Maximum eyebolt dimensions in mm are indicated below:

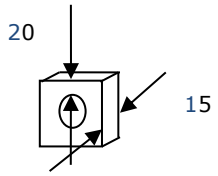

7.2.18 Rating plates

7.2.19 Tolerances

7.3 Design requirements

7.3.1 Core

7.3.2 Windings

7.3.3 Tank

7.3.4 Insulating liquid and material

The maximum oil quantity of 1000 liters is mandatory for all transformers.

It is forbidden to use insulating oil that can be classified as dangerous substances.

For each ”impregnation lot” (all the transformers filled on the same date, even if they belong to different contracts, specifications and types), the Manufacturer shall check the absence of PCB from the oil and issue a self-certification document.

The aforementioned document must be edited in accordance with the following template Annex “A” and in particular, it shall contain:

- the GS type code of the transformer (see list of components);
- the Manufacturer type code;
- the rated power and voltages;
- number and date of the testing notice, contracts and/or purchasing orders;
- identification number of all the units within the lot that have undergone and passed testing;
- a declaration of PCB absence from the oil in the listed transformers, supported by an oil analysis certificate including the units identification of the samples origin;

The expenses and responsibility for said analysis shall be borne exclusively by the Manufacturer and shall be carried out by a ILAC (International Laboratory Accreditation Cooperation) or IAF (International Accreditation Forum) accredited laboratory.

The Italian reference law is D.Lgs n.52/1997 and following modifications. The specific risk for oils classified as dangerous are identified by the “risks statements R45, R46 and R49”, listed in D.M. 28/04/1997 and following modifications.

Annex "A"

Manufacturer: ……..

"SELF-CERTIFICATION" Document for MV/LV transformers

N. ……

In accordance with the Italian law (D.Lgs. 22.05.1999 n. 209 and D.M. 11.10.2001), and with reference to the Enel technical specification GST001, the Manufacturer guarantees the absence of PCB from the oil of the following transformers, under stated and belonging to the same "impregnation lot ".

GS type code ……	Manufacturer code ……..	Rated Power (kVA) ……	Rated Voltages (kV/kV) ……
Testing notice:	N. ……		date ……..
Contract:	N. ……		date ……..
Purchasing Order:	N. ……		date ……..
Manufacturer identification number(s)	…… …… …… ……		

GS type code ……	Manufacturer code ……..	Rated Power (kVA) ……	Rated Voltages (kV/kV) ……
Testing notice:	N. ……		date ……..
Contract:	N. ……		date ……..
Purchasing Order:	N. ……		date ……..
Manufacturer identification number(s)	…… …… …… ……		

Annex: oil analysis certificate N. …….. date ……
issued from the laboratory ……

date …… Signature ……

Figure G2 - Annex "A": template for oil self-certification

7.3.5 Liquid insulating filling and sealing procedures

7.3.6 Bushings

The neutral LV bushing shall be identified by blue colour (RAL 5015) as stated in the followings:

- For type EN 50386 bushing, the metallic washer under tightening bolt shall be painted;
- For type Bus-bar bushing, the border of the flange to be fixed over the tank cover, shall be painted or it must have the body in resin of blue colour.

All bushings shall have self-adhesive labels of 10÷20 mm diameter, inalterable in time and visible from the MV and the LV side of the transformer respectively. The terminal marking (black writings on silver background) shall be:

- for MV bushings: 1 U, 1 V, and 1W;
- for LV bushings: 2 U, 2 V, 2W and 2N for the neutral terminal.

<u>For MV/0,900/0,420 kV transformers</u>:

- MV bushings: 1U, 1V and 1W;
- LV bushings (0,900 kV): 2U, 2V, 2W and 2N the neutral terminal
- LV bushings (0,420 kV): 3U, 3V, 3W and 3N the neutral terminal

The metallic washer under tightening bolt of LV bushing (0,900 kV) shall be painted of orange colour.

The metallic washer under tightening bolt of neutral LV bushing shall be painted of blue colour (RAL 5015).

<u>For MV/0,900 kV transformers</u>:

- MV bushings: 1U, 1V and 1W;
- LV bushings (0,900 kV): 2U, 2V, 2W and 2N the neutral terminal

The metallic washer under tightening bolt of LV bushing (0,900 kV) shall be painted of orange colour.

The metallic washer under tightening bolt of neutral LV bushing shall be painted of blue colour (RAL 5015).

<u>For 0,900/0,420 kV transformers</u>:

- LV bushings (0,900 kV): 1U, 1V, 1W and 1N the neutral terminal
- LV bushings (0,420 kV): 2U, 2V, 2W and 2N the neutral terminal

The metallic washer under tightening bolt of LV bushing (0,900 kV) shall be painted of orange colour.

The metallic washer under tightening bolt of neutral LV bushing shall be painted of blue colour (RAL 5015).

<u>For 0,420/0,900 kV transformers</u>:

- LV bushings (0,420 kV): 1U, 1V, 1W and 1N the neutral terminal
- LV bushings (0,900 kV): 2U, 2V, 2W and 2N the neutral terminal

The metallic washer under tightening bolt of LV bushing (0,900 kV) shall be painted of orange colour.

The metallic washer under tightening bolt of neutral LV bushing shall be painted of blue colour (RAL 5015).

One adhesive label or plate shall be fixed on the cover, near the LV bushings of 0,900 kV and 0,420 kV windings:

Sealed tank transformers shall be provided with a warning self-adhesive labels (Figure G7) in order to prevent improper operations which can compromise the sealing, such as to unscrew the nuts blocking the head gaskets of porcelain MV bushings.

The LV bushings for all 23kV transformers (GST001/1074, 1064, 1065 and 1066) shall have a terminal plate compliant to UNEL 38137-67 (or DIN 43675).

For MV/0,900/0,420 transformers equipped with MV inside cone plug-in bushings, an appropriate insulating protection (LV side) shall be provided to prevent, under normal operating conditions, access to the bushings of both LV windings. The solution adopted shall be approved by Enel.

7.3.6.1 MV bushings

7.3.6.2 LV bushings

7.3.7 De-energized tap-changer for MV voltage regulation

7.3.8 De-energized tap-changer for MV voltage commutation

7.3.9 Supporting and sliding devices

7.3.9.1 Supporting

7.3.9.2 Sliding devices

Transformers shall be provided with sliding devices.

Transformers of rated power of 25 kVA, 50 kVA and 100 kVA shall have sliding devices complying with figure G3 and made of iron channel (U 65×42) complying with EN 10279. the slides shall be welded under the transformer, parallel to the longer side of the tank.

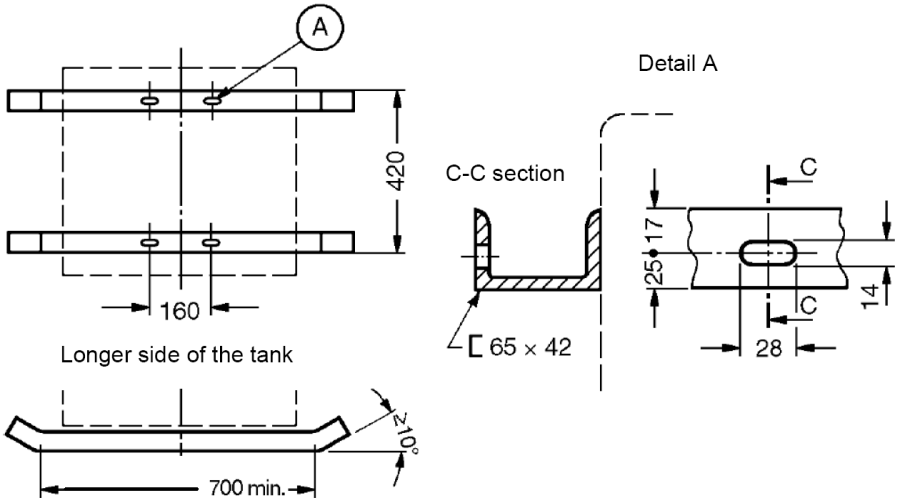

Figure G3 – Sliding devices

Transformers of rated power higher than 100 kVA shall have cast-iron wheels and relative supporting pivots, having size complying with IEC 60076-22. For transformers with rated power 160 and 250 kVA is possible to use nylon wheels.

The Manufacturer's name and the maximum permanent load shall be engraved on each roll.

Pivots shall be made of stainless steel, and their forks shall be made of steel, painted or cured against corrosion. The coupling between forks and the relative rod shall be assembled by stainless steel screws, nuts or hot zinc-plated steel washers.

During transport the complete wheels (wheel + pivot + fork) shall be removed from their normal operating position, and shall travel together with the transformer, in a position that will not cause damage to the protective covering of the transformer.

The wheels for 23kV transformers (GST001/1074, 1064, 1065 and 1066), shall be as indicated in the following figure:

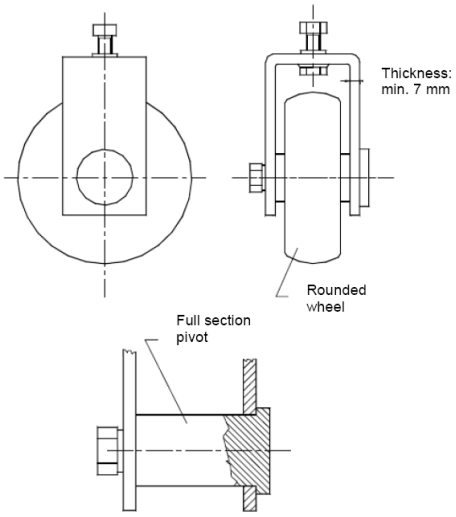

Figure G4 - Special wheels for 23kV transformers

7.3.10 Protective painting

The colour of the final painted layer shall be green RAL 6002**.**

7.3.11 Accessories

7.3.11.1 Lifting and blocking devices

7.3.11.2 Liquid draining plug

7.3.11.3 Thermometer pocket

7.3.11.4 Thermometer

7.3.11.5 Overpressure valve

7.3.11.6 Liquid level indicator

7.3.11.7 Support for surge arresters

7.3.11.8 Earthing terminals

The two earthing terminals shall be place on the bottom of the tank on the two short sides.

7.3.11.9 Rating plates and plate-holders

Transformers shall have two plate-holders (see figure G5) and two rating plates (see figure G6) and placed on the long sides of the transformer. The rating plates shall be mounted on the upper part of plate-holders and shall be fixed with aluminium rivets. Alternatively, plate holder and rating plate could be the same element, made of aluminium, fixed to the transformer in a proper way.

The rating plates shall be made of aluminium, with a thickness of 1 mm. Edges, writings and boxes shall be white on matt black background. The white boxes and the engraved letters shall be of 4,8 mm and 4 mm height, respectively.

Transformers with two primary voltages shall have shown on the rating plate the ratings corresponding to the two operating conditions. In such case the two values of the parameters (voltages, currents, power and short-circuit impedance, when different for the two conditions) shall be engraved in the same box of the rating plate as prescribed in the following.

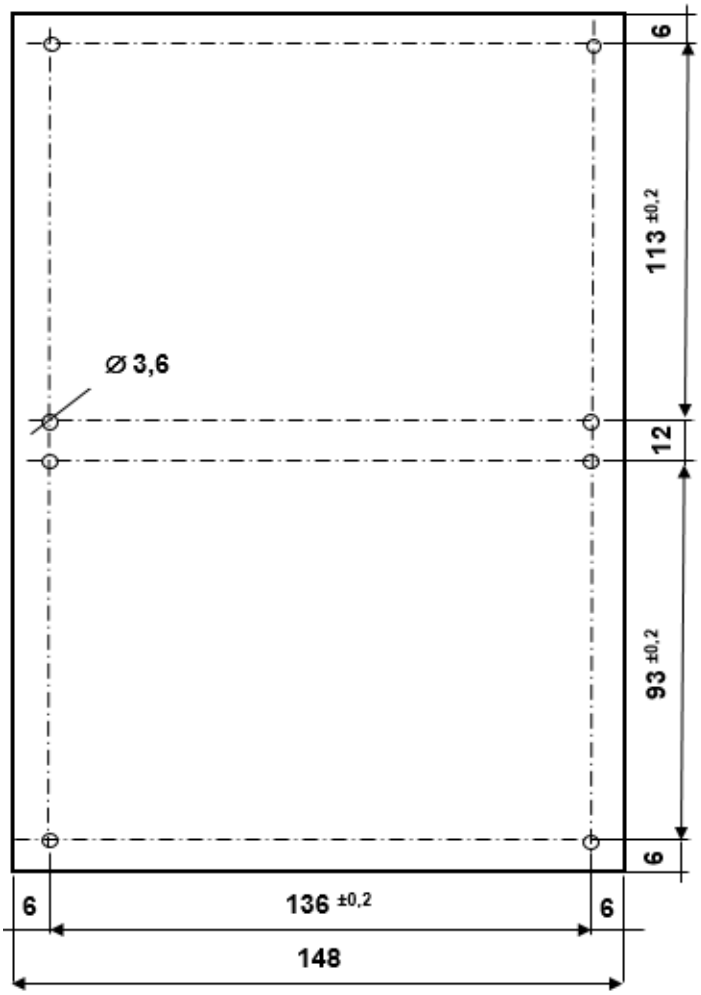

Figure G5 - Plate-holder

Application Areas
Perimeter: *Global*
Staff Function: -
Service Function: -
Business Line: *Enel Grids*

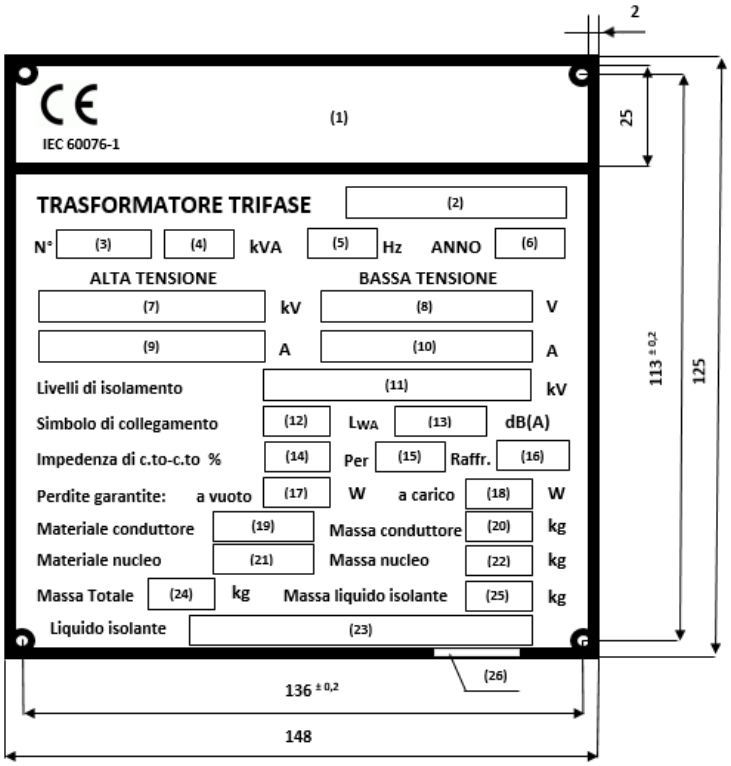

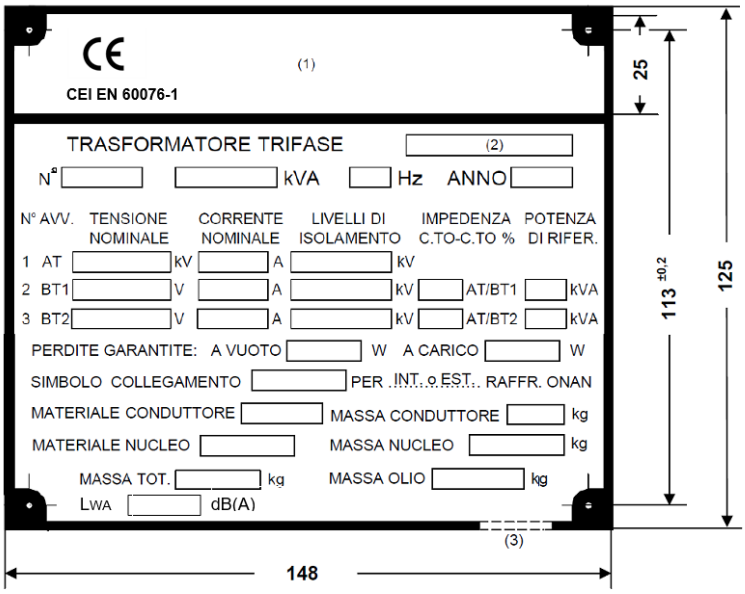

"Rating plate MV/0,900/0,420 kV transformers"

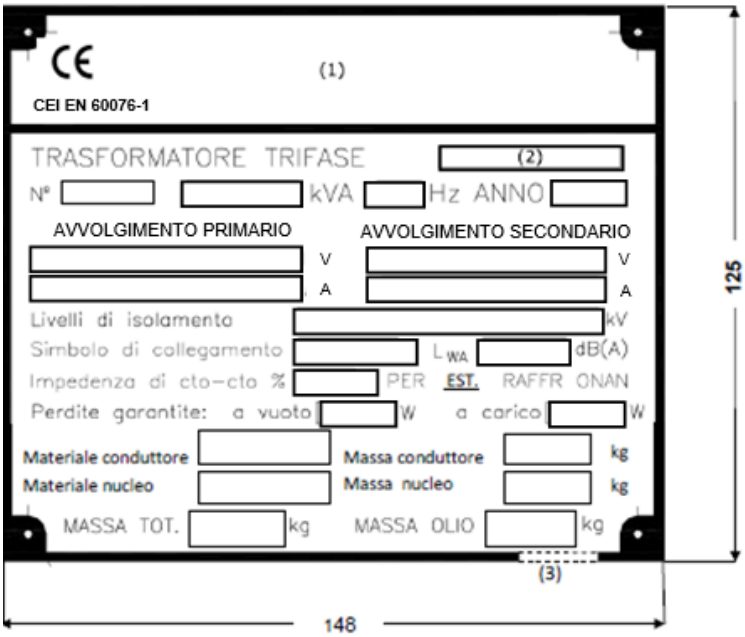

"Rating plate 0,900/0,420 kV and 0,420/0,900 kV transformers"

Figure G6 - Rating plates

Note:

1. Material plate: aluminum
2. Thickness: 1 mm
3. Letter height: 4 mm
4. Letter will be in black colour.

With reference to the figure G6 above, the following information shall be reported engraved on the plate:

1. Name of the Manufacturer
2. Code assigned by Manufacturer to each series of identical units
3. Serial numenber assigned by the Manufacturer
4. Rated power
5. Rated frequency
6. Year of manufacturing
7. Primary rated voltage and regulation:
   - example 1: 20 ± 2x2,5%
   - example 2: 20 ± 2x2,5% // 10 ± 2x2,5%
8. Secondary rated voltage
9. Primary rated current:
   - example 1: 11,5
   - example 2: 11,5 // 23,1
10. Secondary rated current
11. Insulation levels:
    - example 1: IA 125 FI 50 / FI 10
    - example 2: IA 125 FI 50 - IA 75 FI 28 / FI 10
12. Connection symbol

13. Sound power level declared by the Manufacturer
14. Short-circuit impedance
15. Installation:
    - For Italy “EST” (outdoor) or “INT” (indoor)
16. Cooling: example (ONAN – KNAN)
17. No-load losses declared by the Manufacturer
18. Load losses declared by the Manufacturer
19. Conductor material MV and LV windings: example (Aluminum – Copper/Aluminum – Copper)
20. Conductor mass MV and LV windings
21. Core material: example (silicon steel – amorphous steel)
22. Core mass
23. Total mass
24. Insulating liquid mass
25. Insulating liquid: example (mineral oil – natural or synthetic ester liquid)
26. Name of the rating plate Manufacturer

The following warning plate must be fixed on the cover, near the knob of the De-Energized Tap-Changer.

Figure G7 – Warning plate

7.3.11.10 Filling hole and plug (filling cap)

Sealed tank transformers shall be provided with a filling cap, 2” Gas female connection, protruding from the cover up to a height not exceeding the MV bushing porcelain one.

The cap shall be closed by a hermetically sealable, corrosion-proof metal tap.

7.3.11.11 Protection device (e.s type DGPT)

7.3.12 Identification of accessories and components

7.4 Exceptions

7.5 Documentation

7.5.1 Document for the offer

7.5.2 Documentation for the technical conformity assessment (TCA)

7.5.2.1 Not-reserved documentation (Type A)

7.5.2.2 Reserved documentation (Type B)

7.5.3 Documents for delivering

7.6 Tests

7.6.1 List and classification of tests

7.6.1.1 Routine tests

7.6.1.2 Type tests

7.6.1.3 Type tests on accessories

7.6.1.4 Special tests

7.6.1.5 General statements for the tests

7.6.1.5.2 Criteria for type and special tests

In case of several transformers belong to the same family, it is possible to perform type or special test according to GSCG002 7.6.1 a) or b) on only one transformer, (key code), provided that all transformers are made using the same technology.

- Family 1: Transformers with rated power between 50 and 160 kVA, both included, all rated voltages; key code GST001/1048 (100 kVA).
- Family 2: Transformers with rated power between 250 and 400 kVA, both included, all rated voltages; key code GST001/1055 (250 kVA).
- Family 3: Transformers with rated power 630 kVA, all rated voltages; key code GST001/1057 (630 kVA).
- Family 4: Transformers with rated power between 50 and 160 kVA, both included, all rated voltages and natural ester; key code GST001/1048N (100 kVA).
- Family 5: Transformers with rated power between 250 and 400 kVA, both included, all rated voltages and natural ester; key code GST001/1055N (250 kVA).
- Family 6: Transformers with rated power 630 kVA, all rated voltages and natural ester; key code GST001/1057N (630 kVA).

- Family 7: Transformers with 3 windings and rated power between 100 and 160 kVA, both included, all rated voltages; key code GST001/1089 - (20/0,900/0,420 kV - 160/50/110 kVA).
- Family 8: Transformers with 3 windings and rated power 250 kVA, all rated voltages; key code GST001/1092 - (20/0,900/0,420 kV - 250/100/150 kVA).
- Family 9: Transformers with rated power 50 kVA, all rated voltages; key code GST001/1094 - (20/0,900 kV - 50 kVA).
- Family 10: LV/LV transformers with rated power between 25 and 100 kVA, both included; key code GST001/1097 - (0,900/0,420 kV - 100 kVA).
- Family 11: LV/LV transformers with rated power 50 kVA; key code GST001/1098 - (0,420/0,900 kV - 50 kVA).

7.6.2 Tests description

7.6.2.1 Routine tests

7.6.2.1.3 Measurement of voltage ratio and check of phase displacement

For MV/0,900/0,420 kV transformers: the measurement of voltage ratio shall be carried out on all possible winding pairs, in accordance with IEC 60076-1 (§ 11.3).

7.6.2.1.4 Measurement of short-circuit impedance and load loss

For MV/0,900/0,420 kV transformers: measurement of load loss shall be performed in accordance with standard IEC 60076-1 (§ 11.4 - Note 1).

7.6.2.2 Type tests

7.6.2.2.2 Temperature-rise type test

For MV/0,900/0,420 kV transformers:

- Being of transformers with three windings of different type, with different power on the individual secondary windings, it is not possible to give a single test prescription.
- The Manufacturer, agrees with Enel, shall choose among the various opportunities indicated on the Standard IEC 60076-2, the one most suitable for transformer under test, taking into account of the transformer design solution adopted and of laboratory equipment/instrumentation available.
- If the apportionment of power on two secondary windings made the short-circuit method unfeasible, the use of load impedances may be resorted.

7.6.2.3 Type tests on accessories

7.6.2.4 Special tests

7.6.2.4.2 Short-circuit withstand test

For MV/0,900/0,420 kV transformers, the short-circuit withstand test shall be performed in accordance with standard IEC 60076-5, taking into account:

- that the transformer has three windings and therefore each LV winding shall be tested feeding transformer from the MV side, leaving the other LV winding on load.
- of the rated power value of LV winding under test;
- that between the two test cycles, provided for the presence of two LV windings, a time of at least 4 hours shall elapse, so the windings can back to the ambient temperature.

For 0,900/0,420 and 0,420/0,900 kV transformers: the short-circuit withstand test shall be carried out in three-phase, short-circuiting the winding not energised and applying the voltage required to obtain a short-circuit current having a component equal to 25 times the rated current, referred to the main position of the tap-changer in accordance with standard IEC 60076-5.

7.7 Guarantee

7.8 Transport and packing

7.9 Other local issues

7.10 Figures

GST001 ANNEX H - PERU

CONTENTS

7 DESCRIPTION 164

7.1 Service conditions 164

7.2 Ratings 164
7.2.1 Type of transformers 164
7.2.2 Number of windings 164
7.2.3 Number of phases 164
7.2.4 Cooling system 164
7.2.5 Rated power 164
7.2.6 Rated voltages 164
7.2.7 Rated frequency 164
7.2.8 Voltage regulation 164
7.2.9 Windings connections 164
7.2.10 Installation 164
7.2.11 Insulation levels 165
7.2.12 Losses, short circuit impedances and sound power levels 165
7.2.13 Temperature rise 165
7.2.14 Capability to withstand short-circuit 165
7.2.15 Overloading 165
7.2.16 Sound levels 165
7.2.17 Overall dimensions and layout 165
7.2.18 Rating plates 166
7.2.19 Tolerances 166

7.3 Design requirements 166
7.3.1 Core 166
7.3.2 Windings 166
7.3.3 Tank 166
7.3.4 Insulating liquid and material 166
7.3.5 Liquid insulating filling and sealing procedures 166
7.3.6 Bushings 166
7.3.7 De-energized tap-changer for MV voltage regulation 167
7.3.8 De-energized tap-changer for MV voltage commutation 167
7.3.9 Supporting and sliding devices 167
7.3.10 Protective painting 168
7.3.11 Accessories 169
7.3.12 Identification of accessories and components 172

7.4 Exceptions 172

7.5 Documentation 172
7.5.1 Document for the offer 172
7.5.2 Documentation for the technical conformity assessment (TCA) 172
7.5.3 Documents for delivering 172

7.6 Tests 172
7.6.1 List and classification of tests 172
7.6.2 Tests description 173

7.7 Guarantee 173

7.8 Transport and packing 173
7.9 Other local issues 173
7.10 Figures 173

7 DESCRIPTION

The scope of this Local Section is to integrate the Common Part in order to provide the technical standard requirements for the MV/LV transformers of Enel Distribución Perú.

7.1 Service conditions

7.2 Ratings

7.2.1 Type of transformers

7.2.2 Number of windings

7.2.3 Number of phases

7.2.4 Cooling system

7.2.5 Rated power

7.2.6 Rated voltages

7.2.7 Rated frequency

7.2.8 Voltage regulation

7.2.9 Windings connections

7.2.10 Installation

The type of installation can be indoor or outdoor.

Mounting System		
Outdoor		Indoor
Single-Pole	Double-Pole	
50-100 kVA	160-250-400 kVA	250-400-630 kVA

Table H1 - Installation

7.2.11 Insulation levels

7.2.12 Losses, short circuit impedances and sound power levels

7.2.13 Temperature rise

7.2.14 Capability to withstand short-circuit

7.2.15 Overloading

7.2.16 Sound levels

7.2.17 Overall dimensions and layout

The overall dimensions are in table of the List of components MV/LV transformers. The position of the fittings (bushings, eyebolts, etc.) placed on the transformer cover, are described in Figure H1.

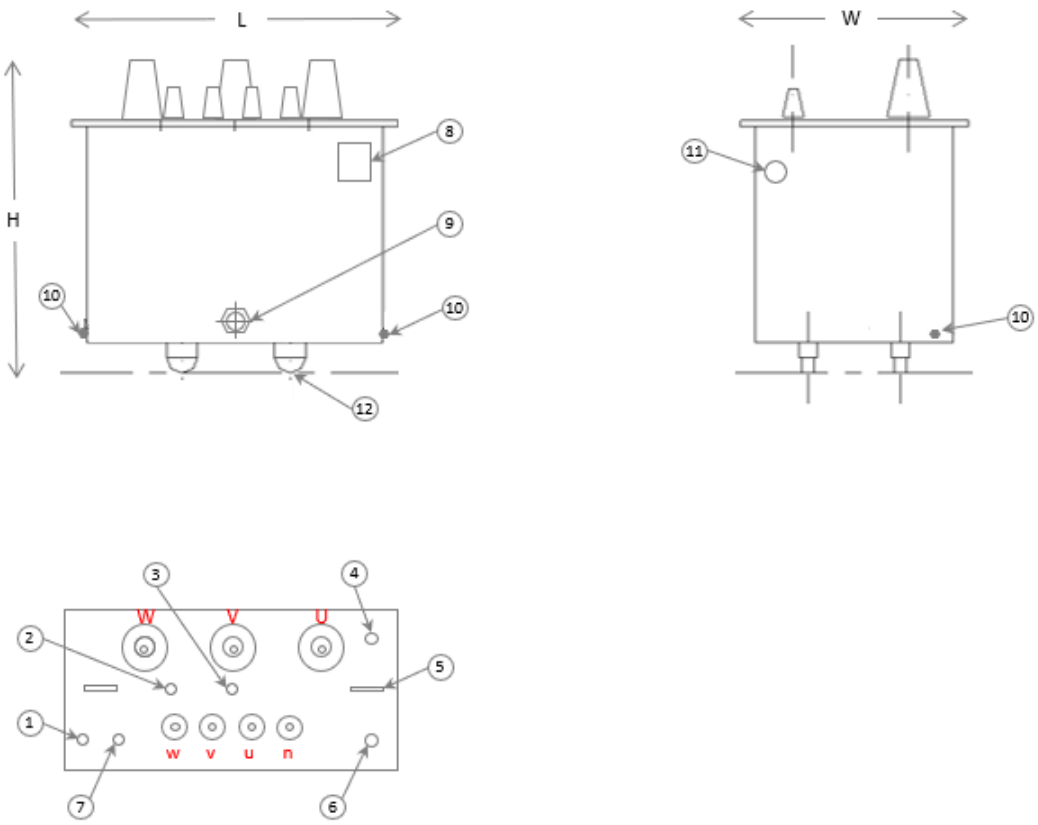

Figure H1 - Overall dimensions and layout

Item	Description
1	Thermometer pocket(1)
2	Tap changers
3	Over-pressure valve(1)

4	Filling hole and plug for oil(filling cap)
5	Lifting and blocking devices
6	Manovacuometer(1)
7	Filling hole and plug for gas cushion(filling cap) (1)
8	Rating plate
9	Liquid draining plug
10	Earthing terminals
11	Oil level indicator(1)
12	Sliding devices and wheels(1)
(1) Only if specifically required	

7.2.18 Rating plates

7.2.19 Tolerances

7.3 Design requirements

7.3.1 Core

7.3.2 Windings

7.3.3 Tank

7.3.4 Insulating liquid and material

7.3.5 Liquid insulating filling and sealing procedures

7.3.6 Bushings

Looking at the transformer from the low voltage side, the low voltage bushing are designated from right to left, by the following symbols:

u - v – w - n

The symbol “n” corresponds to the neutral bushing.

Looking at the transformer from the high voltage side, the high voltage bushings are designated from left to right by the following symbols:

U - V - W

The symbols, which will be perfectly visible, must be located and marked on the tank cover indelibly, in relief and with a minimum size of 30 mm.

The sequence for each phase of the distribution transformer should be marked. The identification should be engraved in high relief or bas-relief, each phase painted with red color and with a minimum size of 30 mm.

7.3.6.1 MV bushings

7.3.6.2 LV bushings

7.3.7 De-energized tap-changer for MV voltage regulation

7.3.8 De-energized tap-changer for MV voltage commutation

7.3.9 Supporting and sliding devices

7.3.9.1 Supporting

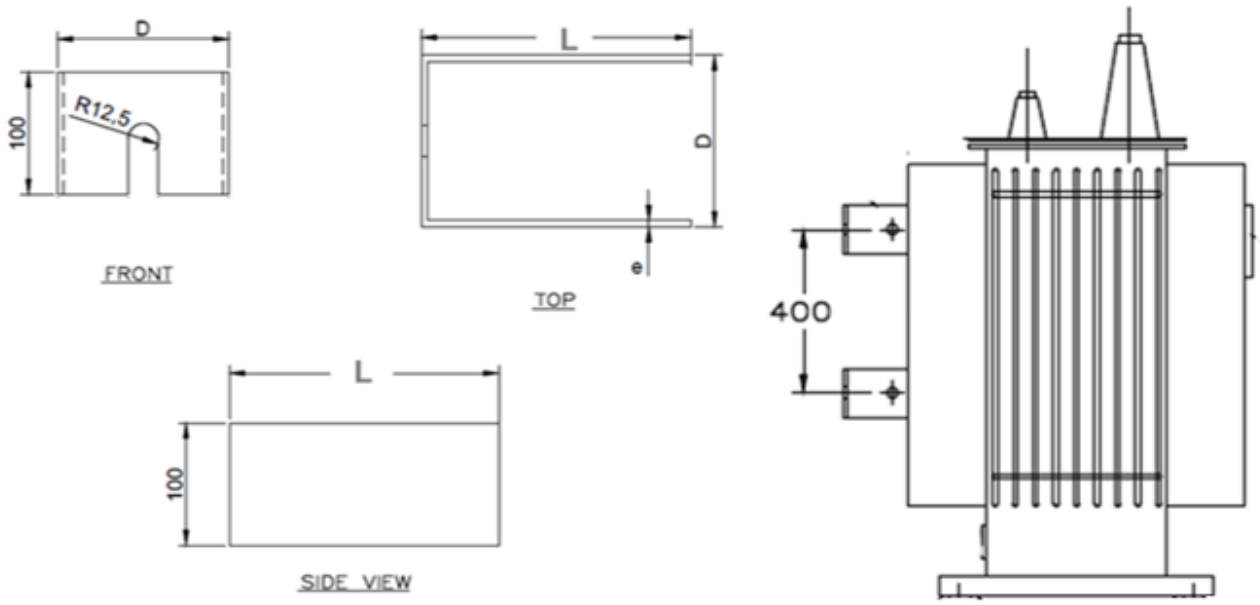

Figure H2 - Support for transformer (dimensions in mm)

The thickness (e) and the front dimension (D) of the Fixing bracket are defined by the manufacturer. The dimension (L) = 120mm for rated voltage of 10kV and (L)= 220 mm for rated voltage of 20 kV.

7.3.9.2 Sliding devices

At the base of the tanks should be placed rails or profiles which serve as fixing means and / or allowing a minimal height over the floor during storage, according to the weight of the equipment.

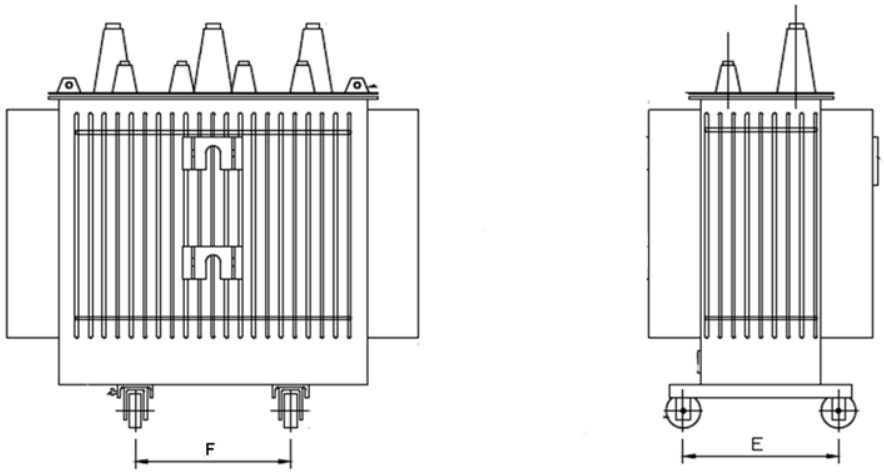

Figure H3: Distance between wheels

The distance “E” should be 585 mm and the distance “F” should be 450 mm for all power values.

7.3.10 Protective painting

The tank must be painting with the label: rated power, voltage ratio (see Figure H4).

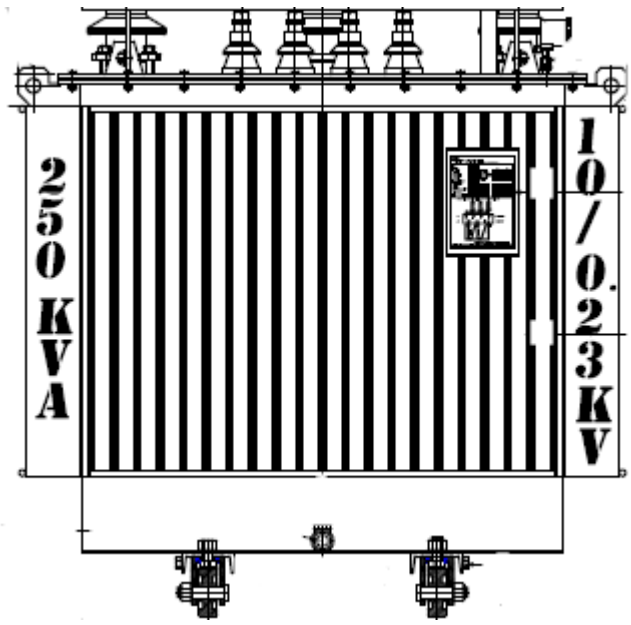

Figure H5: labels

7.3.11 Accessories

7.3.11.1 Lifting and blocking devices

7.3.11.2 Liquid draining plug

7.3.11.3 Thermometer pocket

7.3.11.4 Thermometer

7.3.11.5 Overpressure valve

For gas cushion transformers the over pressure valve is required for all power values.

7.3.11.6 Liquid level indicator

For gas cushion transformers the liquid level indicator is required for all power values.

7.3.11.7 Support for surge arresters

7.3.11.8 Earthing terminals

7.3.11.9 Rating plates and plate-holders

Add the following information to the data plate: Oil type, oil volume and weight, total weight, label "LIBRE DE PCB".

The rating plates (see Figure H5) shall be mounted on the upper part of plate-holders and fixed to the transformer in a proper way.

(1)

TRANSFORMADOR TRIFÁSICO (IEC 60076-1)

MOD.FABRIC.	(2)	N° SERIE	(3)	FECHA FAB.	(4)
POTENCIA	(5)	NRO FASES	(6)	FRECUENCIA	(7)
TENSION AT	(8)	TENSION BT	(9)	CONEXIÓN	(10)
CORRIENTE AT	(11)	CORRIENTE BT	(12)	Zcc %(75°C)	(13)
PERD(VACIO)	(19)	PERD(CARGA)	(20)	NIVEL RUIDO	(21)
MAT. COND.	(22)	MAT. NUCLEO	(23)	VOL. LIQ. AISL.	(28)
PESO COND.	(24)	PESO NUCLEO	(25)	PESO LIQ. AISL.	(26)
				PESO TOTAL	(27)
LIQ. AISLANTE	(29)			ENFRIAMIENTO	(14)

LIBRE DE PCB

POSICION. CONMUT.	TENSION AT	TENSION BT
+2	(17)	230
+1	(17)	
0	(17)	
- 1	(17)	
- 2	(17)	

DEVANADO	NIVEL AISLAMIENTO
AT	(15)
BT	(16)

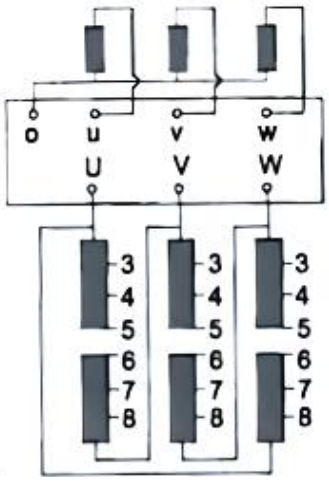

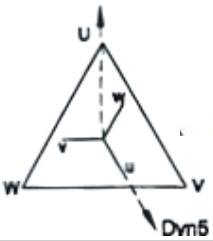

(18)

Figure H5: Rating plate model

NOTE:

- Dimmension : 120mm (-10/+20) x 150 mm (-10/+30);
- All the letters in bas and/or high relief.

With reference to Figure H5, the following information shall be reported engraved on the plate:

1. Name and address of the Manufacturer
2. Code assigned by Manufacturer to each series of identical units
3. Serial number assigned by the Manufacturer
4. Year of manufacturing
5. Rated power
6. Number of phases
7. Rated frequency
8. Primary rated voltage:
9. Secondary rated voltage
10. Vector group
11. Primary rated current:
12. Secondary rated current
13. Short-circuit impedance
14. Cooling: example (ONAN – KNAN)
15. LV Insulation levels (Um/LI/AC) (kV)
16. HV Insulation levels (Um/LI/AC) (kV)
17. Primary rated voltage and regulation: Ur ± 2x2,5%
18. Connection symbol
19. No-load losses declared by the Manufacturer
20. Load losses declared by the Manufacturer
21. Sound power level declared by the Manufacturer
22. Conductor material MV and LV windings: example (Aluminum – Copper/Aluminum – Copper)
23. Core material: example (silicon steel – amorphous steel)
24. Conductor mass MV and LV windings
25. Core mass
26. Insulating liquid mass
27. Total mass
28. Volumen de aceite
29. Insulating liquid: example (mineral oil – natural or synthetic ester liquid)

TAP SWITCH CAUTION PLATE

The following warning plate must be fixed on the cover, near the knob of the De-Energized Tap-Changer. minimum dimensions: 100mm x 50mm. See Figure H6.

Figure H6: Caution Plate

7.3.11.10 Filling hole and plug (filling cap)

7.3.11.11 Protection device (e.s type DGPT)

7.3.12 Identification of accessories and components

7.4 Exceptions

7.5 Documentation

7.5.1 Document for the offer

7.5.2 Documentation for the technical conformity assessment (TCA)

7.5.2.1 Not-reserved documentation (Type A)

7.5.2.2 Reserved documentation (Type B)

7.5.3 Documents for delivering

7.6 Tests

7.6.1 List and classification of tests

7.6.1.1 Routine tests

8) Insulating liquid tests

In addition, a “PCB Free Certificate” is required, endorsed by a report of the PCB absence Test for each unit shipped. The reports must indicate the type of test used and be signed by a responsible professional.

The tests carried out may be colorimetric or chromatographic and the reports must comply with:

- Chromatographic tests must be carried out with the methodology ASTM D4059 00 --(2018) and ASTM D6160 98(2017), the results must show: identification of the transformer, the concentration of arochlores and sum.

- Colorimetric tests must be carried out using the US EPA SW 846 Method 9079 (oil) methodology. The results must show: identification of the transformer, photo of the result, dates, responsible professional.

7.6.1.2 Type tests

7.6.1.3 Type tests on accessories

7.6.1.4 Special tests

7.6.1.5 General statements for the tests

7.6.2 Tests description

7.6.2.1 Routine tests

7.6.2.2 Type tests

7.6.2.3 Type tests on accessories

7.6.2.4 Special tests

7.7 Guarantee

7.8 Transport and packing

7.9 Other local issues

7.10 Figures

GST001 ANNEX I – ROMANIA

CONTENTS

7 DESCRIPTION 176

7.1 Service conditions 176

7.2 Ratings 176
7.2.1 Type of transformers 176
7.2.2 Number of windings 176
7.2.3 Number of phases 176
7.2.4 Cooling system 176
7.2.5 Rated power 176
7.2.6 Rated voltages 176
7.2.7 Rated frequency 176
7.2.8 Voltage regulation 176
7.2.9 Windings connections 176
7.2.10 Installation 176
7.2.11 Insulation levels 176
7.2.12 Losses, short circuit impedances and sound power levels 176
7.2.13 Temperature rise 176
7.2.14 Capability to withstand short-circuit 176
7.2.15 Overloading 176
7.2.16 Sound levels 176
7.2.17 Overall dimensions and layout 176
7.2.18 Rating plates 178
7.2.19 Tolerances 178

7.3 Design requirements 178
7.3.1 Core 178
7.3.2 Windings 178
7.3.3 Tank 178
7.3.4 Insulating liquid and material 178
7.3.5 Liquid insulating filling and sealing procedures 181
7.3.6 Bushings 181
7.3.7 De-energized tap-changer for MV voltage regulation 181
7.3.8 De-energized tap-changer for MV voltage commutation 181
7.3.9 Supporting and sliding devices 181
7.3.10 Protective painting 182
7.3.11 Accessories 183
7.3.12 Identification of accessories and components 187

7.4 Exceptions 187

7.5 Documentation 187
7.5.1 Document for the offer 187
7.5.2 Documentation for the technical conformity assessment (TCA) 187
7.5.3 Documents for delivering 187

7.6 Tests 187
7.6.1 List and classification of tests 187
7.6.2 Tests description 188

7.7 Guarantee 188

7.8 Transport and packing 188
7.9 Other local issues 188
7.10 Figures 188

7 DESCRIPTION

The scope of this Local Section is to integrate the Common Part in order to provide the technical standard requirements for the MV/LV transformers of E-distributie.

7.1 Service conditions

7.2 Ratings

7.2.1 Type of transformers

7.2.2 Number of windings

7.2.3 Number of phases

7.2.4 Cooling system

7.2.5 Rated power

7.2.6 Rated voltages

7.2.7 Rated frequency

7.2.8 Voltage regulation

7.2.9 Windings connections

7.2.10 Installation

Outdoor/indoor (25-50-100-160-250 kVA)
Indoor (400-630-800-1000-1600-2000-2500 kVA)

7.2.11 Insulation levels

7.2.12 Losses, short circuit impedances and sound power levels

For transformers with two primary voltages (20-10 kV), the prescribed rated powers and loss values are referred to both rated voltages.

7.2.13 Temperature rise

7.2.14 Capability to withstand short-circuit

7.2.15 Overloading

7.2.16 Sound levels

7.2.17 Overall dimensions and layout

The overall dimensions are in table of the List of components MV/LV transformers. The position of the fittings (bushings, eyebolts, etc.) placed on the transformer cover, are described in Figure I1 and Table I1.

Application Areas
Perimeter: *Global*
Staff Function: -
Service Function: -
Business Line: *Enel Grids*

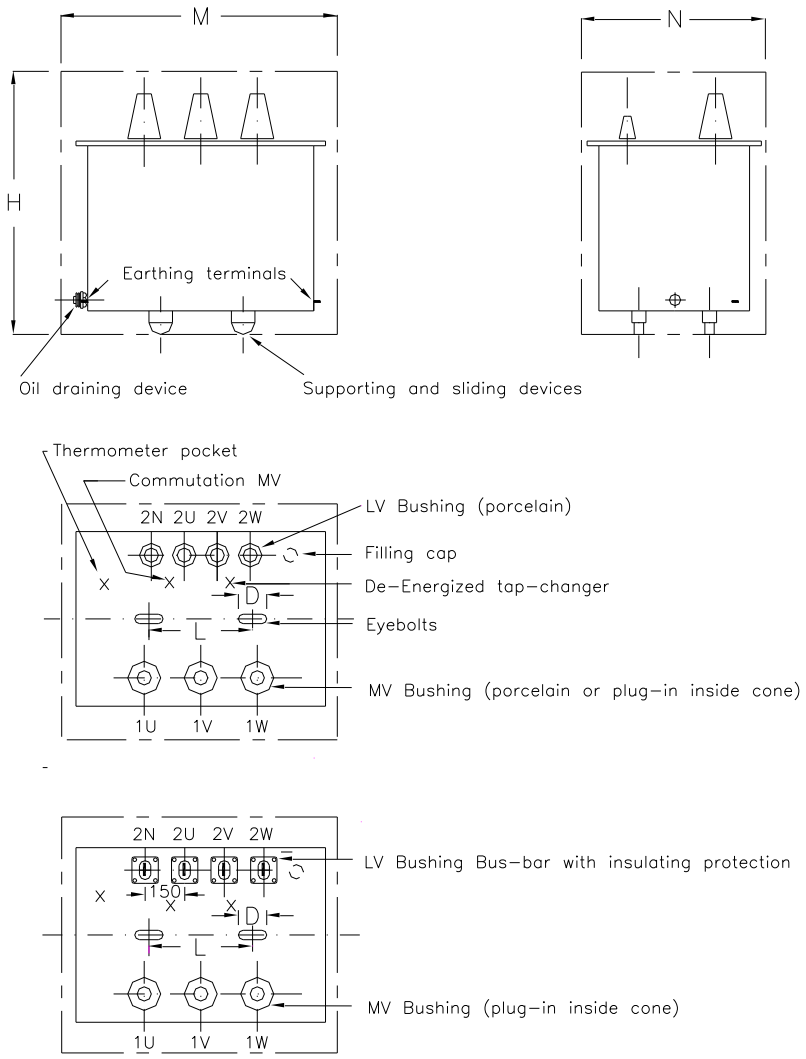

Figure I1 - Overall dimensions and layout

EYEBOLTS

Rated power (kVA)	Internal diameter eyebolts D (mm)	Minimum interaxis distance between eyebolts L (mm)	Maximum interaxis distance between eyebolts L (mm)
25	60	280	- 1.000 mm, for transformers up to 2000 kg - 1.200 mm, for transformers above 2000 kg
50	60	280	
100	60	300	
160	60	300	
250	60	360	
400	60	400	
630	60	400	
800	60	400	
1000	60	400	
1600	60	400	
2000	60	400	
2500	60	400	

Table I1 – Eyebolts: diameter dimensions and interaxis

Maximum eyebolt dimensions in mm are indicated below:

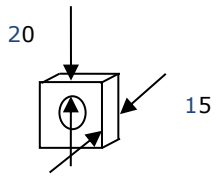

7.2.18 Rating plates

7.2.19 Tolerances

7.3 Design requirements

7.3.1 Core

7.3.2 Windings

7.3.3 Tank

7.3.4 Insulating liquid and material

The maximum oil quantity of 1000 liters is mandatory for all transformers.

It is forbidden to use insulating oil that can be classified as dangerous substances.

For each ”impregnation lot” (all the transformers filled on the same date, even if they belong to different contracts, specifications and types), the Manufacturer shall check the absence of PCB from the oil and issue a self-certification document.

The aforementioned document must be edited in accordance with the following template Annex “A” and in particular, it shall contain:

- the GS type code of the transformer (see list of components);
- the Manufacturer type code;
- the rated power and voltages;
- number and date of the testing notice, contracts and/or purchasing orders;
- identification number of all the units within the lot that have undergone and passed testing;
- a declaration of PCB absence from the oil in the listed transformers, supported by an oil analysis certificate including the units identification of the samples origin;

The expenses and responsibility for said analysis shall be borne exclusively by the Manufacturer and shall be carried out by a ILAC (International Laboratory Accreditation Cooperation) or IAF (International Accreditation Forum) accredited laboratory.

The Romanian reference law is HG 1159/2007 and following modifications. The specific risk for oils classified as dangerous are identified by HG 1408/2008.

Annex "A"

Manufacturer: ……..

"SELF-CERTIFICATION" Document for MV/LV transformers

N. ……

In accordance with the Italian law (D.Lgs. 22.05.1999 n. 209 and D.M. 11.10.2001), and with reference to the Enel technical specification GST001, the Manufacturer guarantees the absence of PCB from the oil of the following transformers, under stated and belonging to the same "impregnation lot ".

GS type code ……	Manufacturer code ……..	Rated Power (kVA) ……	Rated Voltages (kV/kV) ……
Testing notice:	N. ……		date ……..
Contract:	N. ……		date ……..
Purchasing Order:	N. ……		date ……..
Manufacturer identification number(s)	…… …… …… ……		

GS type code ……	Manufacturer code ……..	Rated Power (kVA) ……	Rated Voltages (kV/kV) ……
Testing notice:	N. ……		date ……..
Contract:	N. ……		date ……..
Purchasing Order:	N. ……		date ……..
Manufacturer identification number(s)	…… …… …… ……		

Annex: oil analysis certificate N. …….. date ……
issued from the laboratory ……

date …… Signature ……

NOTE: replace the sentence "In accordance with the Italian law (D.Lgs. 22.05.1999 n. 209 and D.M. 11.10.2001)…" with: "In accordance with the Romanian law (HG 173/2000)…"

Figure I2 - Annex "A": template for oil self-certification

7.3.5 Liquid insulating filling and sealing procedures

7.3.6 Bushings

The neutral LV bushing shall be identified by blue colour (RAL 5015) as stated in the followings:

- For type EN 50386 bushing, the metallic washer under tightening bolt shall be painted;
- For type Bus-bar bushing, the border of the flange to be fixed over the tank cover, shall be painted or it must have the body in resin of blue colour.

All bushings shall have self-adhesive labels of 10÷20 mm diameter, inalterable in time and visible from the MV and the LV side of the transformer respectively. The terminal marking (black writings on silver background) shall be:

- for MV bushings: 1 U, 1 V, and 1W;
- for LV bushings: 2 U, 2 V, 2W and 2 N for the neutral terminal.

Sealed tank transformers shall be provided with a warning self-adhesive labels in order to prevent improper operations which can compromise the sealing, such as to unscrew the nuts blocking the head gaskets of porcelain MV bushings.

7.3.6.1 MV bushings

7.3.6.2 LV bushings

7.3.7 De-energized tap-changer for MV voltage regulation

7.3.8 De-energized tap-changer for MV voltage commutation

7.3.9 Supporting and sliding devices

7.3.9.1 Supporting

7.3.9.2 Sliding devices

Transformers shall be provided with sliding devices.

Transformers of rated power of 25 kVA, 50 kVA and 100 kVA shall have sliding devices complying with figure I3 and made of iron channel (U 65×42) complying with EN 10279. the slides shall be welded under the transformer, parallel to the longer side of the tank.

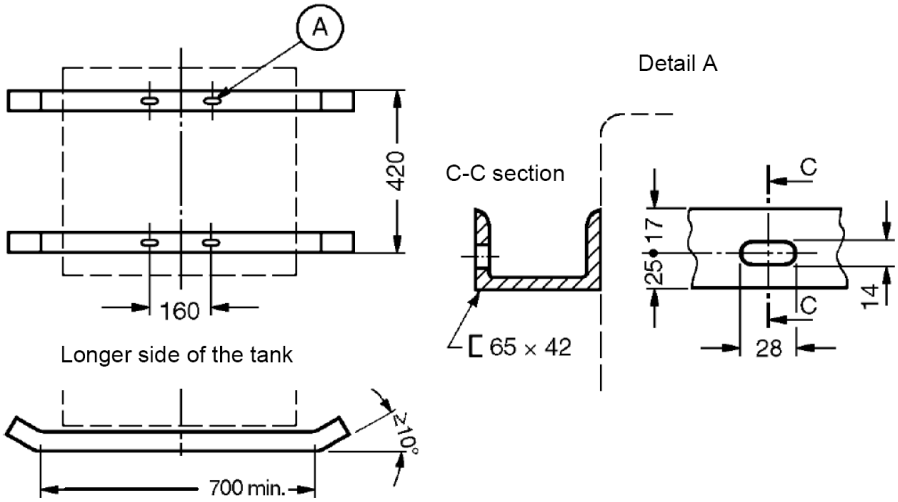

Figure I2 – Sliding devices

Transformers of rated power higher than 100 kVA shall have cast-iron wheels and relative supporting pivots, having size complying with IEC 60076-22. For transformers with rated power 160 and 250 kVA is possible to use nylon wheels.

The Manufacturer's name and the maximum permanent load shall be engraved on each roll.

Pivots shall be made of stainless steel, and their forks shall be made of steel, painted or cured against corrosion. The coupling between forks and the relative rod shall be assembled by stainless steel screws, nuts or hot zinc-plated steel washers.

During transport the complete wheels (wheel + pivot + fork) shall be removed from their normal operating position, and shall travel together with the transformer, in a position that will not cause damage to the protective covering of the transformer.

7.3.10 Protective painting

The colour of the final painted layer shall be green RAL 6002**.**

7.3.11 Accessories

7.3.11.1 Lifting and blocking devices

7.3.11.2 Liquid draining plug

7.3.11.3 Thermometer pocket

7.3.11.4 Thermometer

7.3.11.5 Overpressure valve

7.3.11.6 Liquid level indicator

7.3.11.7 Support for surge arresters

7.3.11.8 Earthing terminals

The two earthing terminals shall be place on the bottom of the tank on the two short sides.

7.3.11.9 Rating plates and plate-holders

Transformers shall have two plate-holders (see figure I4) and two rating plates (see figure I5) and placed on the long sides of the transformer. The rating plates shall be mounted on the upper part of plate-holders and shall be fixed with aluminium rivets. Alternatively, plate holder and rating plate could be the same element, made of aluminium, fixed to the transformer in a proper way.

Plate-holders, even if mobile, shall be fixed to the transformer in a way allowing the complete painting of all parts that are behind them. Fixed plate-holders shall not be welded to the fins. The rating plates shall be made of aluminium, with a thickness of 1 mm. Edges, writings and boxes shall be white on matt black background. The white boxes and the engraved letters shall be of 4,8 mm and 4 mm height, respectively.

Transformers with two primary voltages shall have shown on the rating plate the ratings corresponding to the two operating conditions. In such case the two values of the parameters (voltages, currents, power and short-circuit impedance, when different for the two conditions) shall be engraved in the same box of the rating plate as prescribed in the following.

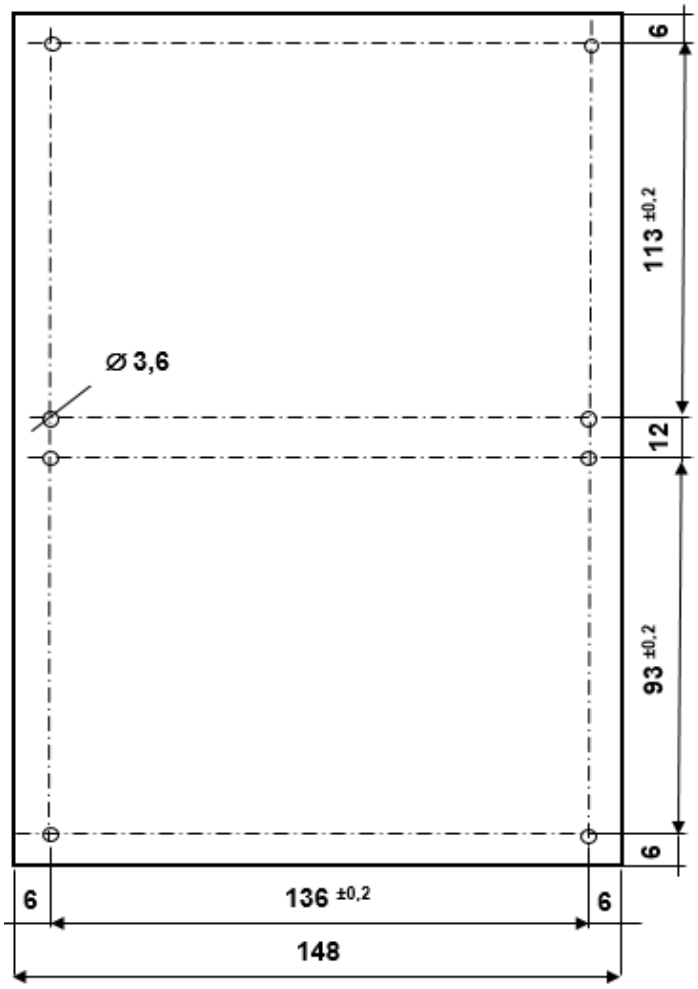

Figure I4- Plate-holder

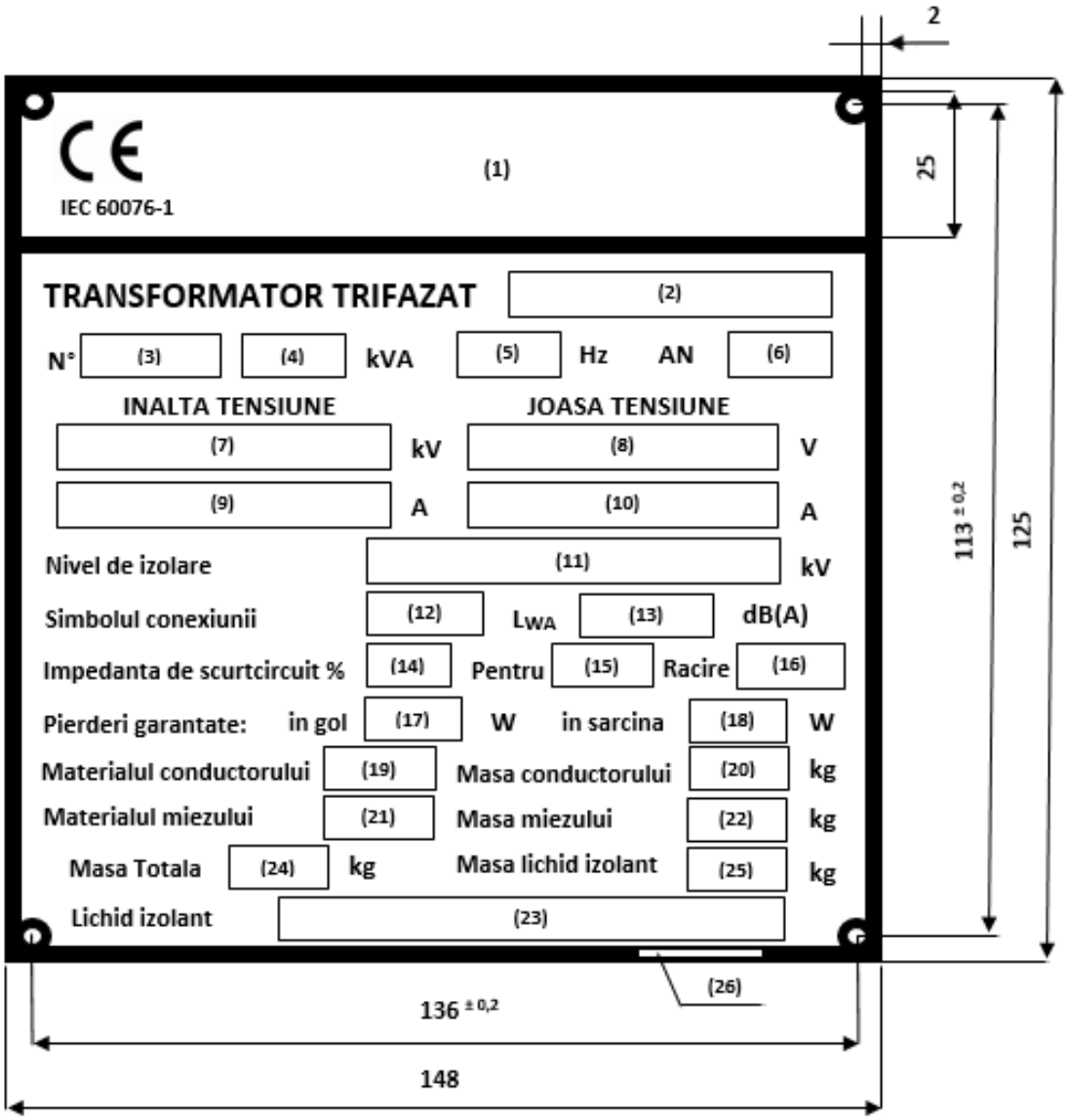

Figure I5 – Rating plate

Note:

1. Material plate: aluminium
2. Thickness: 1 mm
3. Letter height: 4 mm
4. Letter will be in black colour.

With reference to the figure I5 above, the following information shall be reported engraved on the plate:

1. Name of the Manufacturer
2. Code assigned by Manufacturer to each series of identical units

3. Serial numenber assigned by the Manufacturer
4. Rated power
5. Rated frequency
6. Year of manufacturing
7. Primary rated voltage and regulation:
   - example 1: 20 ± 2x2,5%
   - example 2: 20 ± 2x2,5% // 10 ± 2x2,5%
8. Secondary rated voltage
9. Primary rated current:
   - example 1: 11,5
   - example 2: 11,5 // 23,1
10. Secondary rated current
11. Insulation levels:
    - example 1: IA 125 FI 50 / FI 10
    - example 2: IA 125 FI 50 - IA 75 FI 28 / FI 10
12. Connection symbol
13. Sound power level declared by the Manufacturer
14. Short-circuit impedance
15. Installation:
    - For Romania “EXT” (outdoor) or “INT” (indoor)
16. Cooling: example (ONAN – KNAN)
17. No-load losses declared by the Manufacturer
18. Load losses declared by the Manufacturer
19. Conductor material MV and LV windings: example (Aluminum – Copper/Aluminum – Copper)
20. Conductor mass MV and LV windings
21. Core material: example (silicon steel – amorphous steel)
22. Core mass
23. Total mass
24. Insulating liquid mass
25. Insulating liquid: example (mineral oil – natural or synthetic ester liquid)
26. Name of the rating plate Manufacturer

The following warning plate must be fixed on the cover, near the knob of the De-Energized Tap-Changer.

Figure I6– Warning plate

7.3.11.10 Filling hole and plug (filling cap)

Sealed tank transformers shall be provided with a filling cap, 2" Gas female connection, protruding from the cover up to a height not exceeding the MV bushing porcelain one.

The cap shall be closed by a hermetically sealable, corrosion-proof metal tap.

7.3.11.11 Protection device (e.s type DGPT)

A protection device (DGPT) shall be installed on transformers with rated power >1000 kVA.

7.3.12 Identification of accessories and components

7.4 Exceptions

7.5 Documentation

7.5.1 Document for the offer

7.5.2 Documentation for the technical conformity assessment (TCA)

7.5.2.1 Not-reserved documentation (Type A)

7.5.2.2 Reserved documentation (Type B)

7.5.3 Documents for delivering

7.6 Tests

7.6.1 List and classification of tests

7.6.1.1 Routine tests

7.6.1.2 Type tests

7.6.1.3 Type tests on accessories

7.6.1.4 Special tests

7.6.1.5 General statements for the tests

7.6.1.5.2 Criteria for type and special tests

In case of several transformers belong to the same family, it is possible to perform type or special test according to GSCG002 7.6.1 a) or b) on only one transformer, (key code), provided that all transformers are made using the same technology.

- Family 1: Transformers with rated power between 50 and 160 kVA, both included, all rated voltages; key code GST001/1120 (100 kVA).
- Family 2: Transformers with rated power between 250 and 400 kVA, both included, all rated voltages; key code GST001/1122 (250 kVA).

- Family 3: Transformers with rated power between 630 and 1000 kVA, both included, all rated voltages; key code GST001/1132 (630 kVA).
- Family 4: Transformers with rated power between 1600 and 2500 kVA, all rated voltages; key code GST001/1164 (2500 kVA).
- Family 5: Transformers with rated power between 50 and 160 kVA, both included, all rated voltages and natural ester; key code GST001/1120N (100 kVA).
- Family 6: Transformers with rated power 250 kVA, all rated voltages and natural ester; key code GST001/1122N (250 kVA).
- Family 7: Transformers with rated power between 400 and 630 kVA, all rated voltages and synthetic ester; key code GST001/1132S (630 kVA).
- Family 8: Transformers with rated power between 1600 and 2500 kVA, all rated voltages and natural ester; key code GST001/1164N (2500 kVA).

7.6.2 Tests description

7.6.2.1 Routine tests

7.6.2.2 Type tests

7.6.2.3 Type tests on accessories

7.6.2.4 Special tests

7.7 Guarantee

7.8 Transport and packing

7.9 Other local issues

7.10 Figures

CONTENTS – AMENDMENT 1

SCOPE **2**

COMMON PART **2**

7.2.12 Losses, short circuit impedances and sound power levels *2*

7.2.13 Temperature rise *3*

7.3.6.1 MV bushings *3*

7.3.11.3 Thermometer pocket *3*

7.3.10 Protective painting *3*

7.5.1 Document for the offer *4*

7.6.1 List and classification of tests *4*

7.6.1.1 Routine tests *4*

7.6.1.2 Type tests *5*

7.6.2.3 Type tests on accessories *6*

7.10 Figures *6*

ANNEX A: LIST OF COMPONENTS **8**

ANNEX B: TECHNICAL OFFER **40**

ANNEX C – BRAZIL **43**

7.2.18 Rating plates *43*

7.6 Tests *43*

ANNEX E – COLOMBIA **43**

7.2.12 Losses, short circuit impedances and sound power levels *43*

7.3.6 Bushings *44*

7.3.9.2 Sliding devices *46*

7.3.11.5 Overpressure valve *46*

7.3.11.6 Liquid level indicator *46*

7.6 Tests *46*

ANNEX F - IBERIA/SPAIN **47**

7.3.11.3 Thermometer pocket *47*

7.3.11.4 Thermometer *47*

ANNEX H – PERU **47**

7.3.10 Protective painting *47*

7.3.11.3 Thermometer pocket *48*

ANNEX I – ROMANIA **48**

7.6.1.5.2 Criteria for type and special tests *48*

SCOPE

The scope of the present document is to update some specific requirements of Global Standard GST001 rev. 05 31/12/2022.

The parts of the GST001 rev. 05 that have been updated are hereby reported with the corresponding clauses and sub-clauses number, highlighting the specific changes in yellow.

The present Amendment **replaces** the corresponding prescriptions (clauses and sub-clauses hereby reported) in the GST001 rev. 05 in force, where applicable and unless otherwise specified.

This Amendment applies to all the Enel Group Distribution Companies indicated in GST001 rev. 05.

COMMON PART

7.2.12 Losses, short circuit impedances and sound power levels

See List of Components and Local Sections.

For Enel Group Distribution Companies in Europe (Iberia/Spain, Italy, Romania) the maximum losses (no-load and load losses) values in compliance with EU Regulation and with standard series EN 50708 are mandatory.

For Enel Group Distribution Companies in Latam, the maximum losses (no-load and load losses) values in compliance with EU Regulation and with standard series EN 50708 are preferred, where applicable. For specific values, see List of Components.

If the capitalization of losses applies, the related capitalization factors are specified in the offer request. The capitalization of losses is given by:

$$C_c = C + A \times P_v + B \times P_j$$

Where:

- Cc is the capitalized cost of the transformer (expressed in the appropriate currency)
- C is the cost declared by the Manufacturer in the offer (expressed in the appropriate currency)
- A is the no-load loss factor (expressed in the appropriate currency per kW) (1)
- B is the load loss factor (expressed in the appropriate currency per kW) (1)
- Pv is the no-load loss declared by the Manufacturer (expressed in kW)
- Pj is the load loss declared by the Manufacturer (expressed in kW)
- (1) Values given at tender stage

If the losses exceed the maximum tolerance limits admitted by IEC 60076-1 or local regulation (if any), the transformer is rejected.

For the measured losses exceeding the prescribed values and/or declared by the Manufacturer, within the tolerance indicated in 7.2.19, penalties will be applied.

If loss capitalization is applied during a tender, the calculation of the penalties to apply to the single transformer is the following:

$$L_v = 2 \times A \times \Delta P_v$$

$$L_j = 2 \times B \times \Delta P_j$$

Where:

L_v penalties for no-load loss excess (expressed in the appropriate currency);

L_j penalties for load loss excess (expressed in the appropriate currency);

ΔP_v difference between measured no-load loss and no-load loss declared by the Manufacturer (kW);

ΔP_j difference between measured load loss and load loss declared by the Manufacturer (kW).

7.2.13 Temperature rise

See IEC 60076-2 or IEC 60076-14 (see paragraph 7.3.4 Insulating liquid and material).

7.3.6.1 MV bushings

Solution	MV Bushing
1	EN 50180 -- type 24-250/P3
3	EN 50180 -- type 36-250/P3
4	EN 50180 inside cone plug-in: - 24 kV interface type 0 [see Fig. A] - 36 kV interface type 1
5	EN 50180 outside cone plug-in: - 24 kV interface type A1 - 36 kV interface type B1
6	IEC 60137 (porcelain or polymeric)

7.3.11.3 Thermometer pocket

Transformers shall have a thermometer pocket to allow the measuring of the top- insulating liquid temperature. This pocket shall be placed as shown in the IEC 60076-22-7 (previous EN 50216-4) (type A1). The pocket shall be provided with a corrosion-proof cap. The thread shall be protected with silicone-grease.

The thermometer pocket shall be filled with the same insulating liquid of transformer.

7.3.10 Protective painting

The external painting of transformers and metallic components made of iron materials, shall use liquid epoxy or/and polyurethane paints and varnishes according to ISO 12944 (standardized paint systems) or powder coating.

Pollution Levels	Corrosivity	Durability	Painting Category
Medium	C3	Medium	***C3M***
Heavy	C4	Medium	***C4M (or C3H)***
Very Heavy	C5	Medium	***C5M (or C4H)***

Internal surfaces of the transformers shall be protected by a hot insulating liquid resistant painting (epoxy-polyamine or powder coating or equivalent) having at least a thickness[1], ≥ 30 µm.

[1] Total Dry Nominal Thickness according to NDFT and its acceptance criteria, as stated in ISO 19840 and ISO 2808.

All the surfaces to be painted shall be prepared by Manufacturer with a suitable sandblasting or chemical cleaning (degreasing) treatments, specific for the painting cycle adopted. The effectiveness of surface preparation work shall be assessed using standards from series ISO 8501: Preparation of steel substrates before application of paints and related products -- Visual assessment of surface cleanliness --.

The paint must be free of lead oxides or chromates. The safety and technical data sheets of the painting shall be provided by the Manufacturer.

The color to be used is prescribed in Local Section.

The Coating System/Painting cycle shall be:

- Totally defined in terms of products, typologies and processes.
- Certified with the reference to tests carried out by independent laboratories, in compliance to ISO 12944, with a clear indication of Corrosivity and Durability levels.

7.5.1 Document for the offer

The technical documentation to be produced by the Supplier for the economical offer shall contain the following items:

- The data in the Annex B with the documentation requested;
- The Overall Drawings with all the relevant details (in local language);
- The drawing of the Rating Plate (in local language).

The full compliance to the prescriptions indicated in this document and relevant standards of the main components and the accessories shall be ensured by the Manufacturer.

Each exception to this Global Standard and to the related ones shall be expressly evidenced in the Annex B during the technical offer submission, otherwise it will not be considered.

7.6.1 List and classification of tests

7.6.1.1 Routine tests

1) Check of the correspondence with the approved prototype
2) Measurement of winding resistance.
3) Measurement of voltage ratio and check of phase displacement.
4) Measurement of short-circuit impedance and load loss.
5) Measurement of no-load loss and current.
6) Dielectric routine tests (IEC 60076-3).
    a. separate-source power-frequency voltage withstand test for MV and LV windings
    b. induced AC withstand voltage test
7) Leak testing with pressure for liquid-immersed transformers (tightness test)

8) Insulating liquid tests (IEC 60422, IEC 62975 or IEC 61203, depending on the insulating liquid type)
9) Test on de-energized tap-changers
10) Measurement of coating thickness.
11) Insulation of auxiliary wiring (for rated power transformers >1000kVA)

7.6.1.2 Type tests

1) Verification of the compliance to the specification requirements
2) Temperature-rise type test (IEC 60076-2 or IEC 60076-14).
3) Dielectric type tests (IEC 60076-3)
4) lightning impulse test
5) Determination of sound level (IEC 60076-10).
6) Measurement of no-load loss and current at 90 % and 110 % of rated voltage.
7) Cross-cut test: ISO 2409.

7.6.2.1.8 Insulating liquid tests

The manufacturer shall provide the following certificates/test report, depending on the insulating liquid:

Mineral oil:

1) The certificate of the supplier of the liquid, containing all the parameters prescribed in the IEC 60296 – Table 2 (PCBs included), with the following additional indication. The supplier of the liquid shall declare possible anti-oxidant additives (type and concentration; “TVBT” classification - partially inhibited), if they are present, or the absence of anti-oxidant additives shall be verified (IEC 60666 - verification of the “TVBU” classification - not-inhibited mineral liquid).
2) The liquid tests according to IEC 60422–Table 3 (acceptance and type test where applicable) made on the same batch of liquid used in the transformer (each impregnating lot), under the transformer manufacturer responsibility. This example should be made previously or after the acceptance test.

Natural esters:

1) The certificate of the supplier of the liquid, containing all the parameters prescribed in the IEC 62770 – Table 1 (PCBs included), with the following additional indication.
2) The liquid tests according to IEC 62975 –Table 3 (acceptance and type test where applicable) made on the same batch of liquid used in the transformer (each impregnating lot), under the transformer manufacturer responsibility. This example should be made previously or after the acceptance test.

Synthetic esters:

1) The certificate of the supplier of the liquid, containing all the parameters prescribed in the IEC 61099 – Table 1 (PCBs included), with the following additional indication.

2) The liquid tests according to IEC 61203 (acceptance and type test where applicable) made on the same batch of liquid used in the transformer (each impregnating lot), under the transformer manufacturer responsibility.

For the PCB absence it is mandatory to perform the verification in a laboratory accredited ILAC or IAF in compliance with the test method of IEC 61619 with the indication of the transformer sampled. The detectability value of the analytic method shall be at least 2 mg/kg (2 ppm) to assure the respect of the parameters reported in table 3 of IEC 60422. In case of natural or synthetic ester insulating liquid, see IEC 62975 (Table 3) and IEC 61203, respectively.

7.6.2.3 Type tests on accessories

7.6.2.3.1 Tests concerning pressurized corrugated tanks

According to EN 50708-2-4.

7.10 Figures

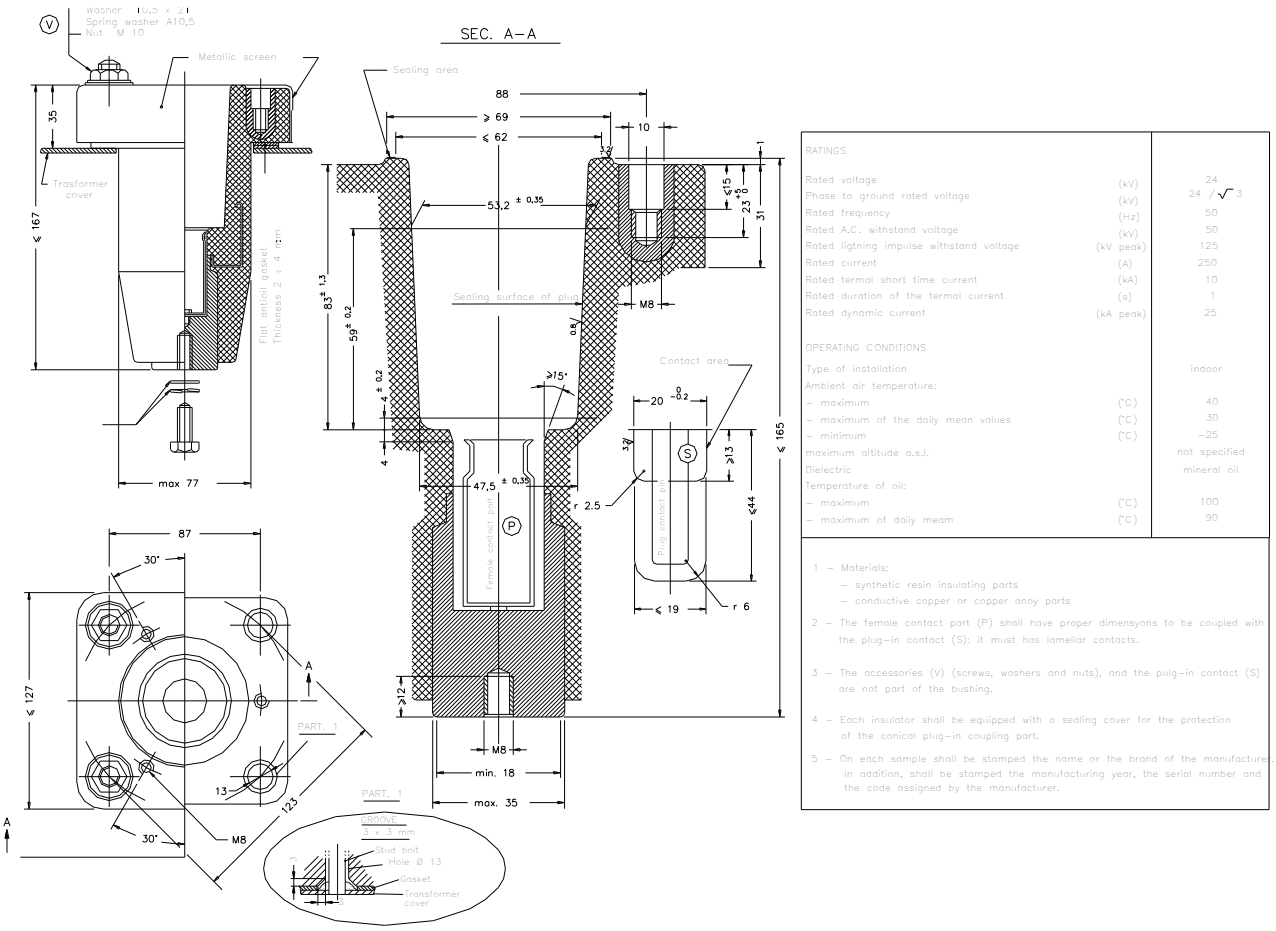

Figure 1 MV Bushing "Plug-in inside cone" – 24 kV

ANNEX A: LIST OF COMPONENTS

GS Type Code (**)	Country	Country Code	Rated Power (kVA)	Cooling System	Rated MV (kV)	Volt. Reg. (steps number x step %)	Rated LV (kV)	MV insulation level Um/LI/AC (kV)	LV Insulation level Um/LI/AC (kV)	f (Hz)	N. of phases 1P, 2P, 3P	Connection Symbol	Zsc (%)	MV bushing type (ref. GS p. 6.5.1)	MV Minimum creepage distance (mm)	LV bushing type (ref. GS p. 6.5.2)	Losses classes or max values	Load Loss (W)	No Load Loss (W)	Noise level - Sound Power (dB)	Wheels (Yes/ No)	Overall dimensions HxLxW (mm)	Maximum weight (kg)	Service conditions - Pollution level (ref. GS p. 4)	Painting (ref. GS p. 6.9)	Brackets for pole (Yes/ No)	Brackets for arrester (Yes/ No)
GST001/1035	Italy	110161	630	ONAN	20-10	±2x2.5%	0,42	24/125/50 12/75/28	1.1/-/10	50	3P	Dyn11	6	Sol. 4	N/A	Sol. 7	Ak+10% A0-10%+15%	5060	621	52	Yes	1550x1570x745	2700	Heavy	C4M or C3H	No	No
GST001/1036	Italy	110160	400	ONAN	20-10	±2x2.5%	0,42	24/125/50 12/75/28	1.1/-/10	50	3P	Dyn11	4	Sol. 4	N/A	Sol. 7	Ak+10% A0-10%+15%	3575	445	50	Yes	1350x1415x740	2700	Heavy	C4M or C3H	No	No
GST001/1037	Italy	110159	400	ONAN	15	±2x2.5%	0,42	17.5/95/38	1.1/-/10	50	3P	Dyn11	4	Sol. 4	N/A	Sol. 7	Ak Ao-10%	3250	387	50	Yes	1800x1350x750	2700	Heavy	C4M or C3H	No	No
GST001/1038	Italy	110158	250	ONAN	15	±2x2.5%	0,42	17.5/95/38	1.1/-/10	50	3P	Dyn11	4	Sol. 4	N/A	Sol. 7	Ak Ao-10%	2350	270	47	Yes	1800x1350x750	2700	Heavy	C4M or C3H	No	No
GST001/1039	Italy	110157	160	ONAN	15	±2x2.5%	0,42	17.5/95/38	1.1/-/10	50	3P	Dyn11	4	Sol. 4	N/A	Sol. 7	Ak Ao-10%	1750	189	44	Yes	1800x1350x750	1250	Heavy	C4M or C3H	No	No
GST001/1041	Italy	110049	100	ONAN	15	±2x2.5%	0,42	17.5/95/38	1.1/-/10	50	3P	Dyn11	4	Sol. 1	600	Sol. 1	Ak Ao-10%	1250	130	41	No	1600x1200x750	1250	Heavy	C4M or C3H	No	No
GST001/1041N	Italy	110050	100	KNAN	15	±2x2.5%	0,42	17.5/95/38	1.1/-/10	50	3P	Dyn11	4	Sol. 1	600	Sol. 1	Ak Ao-10%	1250	130	41	No	1600x1200x750	1250	Heavy	C4M or C3H	No	No
GST001/1042	Italy	110058	160	ONAN	15	±2x2.5%	0,42	17.5/95/38	1.1/-/10	50	3P	Dyn11	4	Sol. 1	600	Sol. 2	Ak Ao-10%	1750	189	44	Yes	1600x1350x750	1250	Heavy	C4M or C3H	No	No
GST001/1042N	Italy	110060	160	KNAN	15	±2x2.5%	0,42	17.5/95/38	1.1/-/10	50	3P	Dyn11	4	Sol. 1	600	Sol. 2	Ak Ao-10%	1750	189	44	Yes	1600x1350x750	1250	Heavy	C4M or C3H	No	No
GST001/1043	Italy	110059	160	ONAN	15	±2x2.5%	0,42	17.5/95/38	1.1/-/10	50	3P	Dyn11	4	Sol. 4	N/A	Sol. 2	Ak Ao-10%	1750	189	44	Yes	1600x1350x750	1250	Heavy	C4M or C3H	No	No
GST001/1044	Italy	110067	250	ONAN	15	±2x2.5%	0,42	17.5/95/38	1.1/-/10	50	3P	Dyn11	4	Sol. 4	N/A	Sol. 7	Ak Ao-10%	2350	270	47	Yes	1750x1400x800	2700	Heavy	C4M or C3H	No	No
GST001/1044N	Italy	110068	250	KNAN	15	±2x2.5%	0,42	17.5/95/38	1.1/-/10	50	3P	Dyn11	4	Sol. 4	N/A	Sol. 7	Ak Ao-10%	2350	270	47	Yes	1750x1400x800	2700	Heavy	C4M or C3H	No	No
GST001/1045	Italy	110079	400	ONAN	15	±2x2.5%	0,42	17.5/95/38	1.1/-/10	50	3P	Dyn11	4	Sol. 4	N/A	Sol. 7	Ak Ao-10%	3250	387	50	Yes	1850x1600x1030	2700	Heavy	C4M or C3H	No	No
GST001/1045N	Italy	110080	400	KNAN	15	±2x2.5%	0,42	17.5/95/38	1.1/-/10	50	3P	Dyn11	4	Sol. 4	N/A	Sol. 7	Ak Ao-10%	3250	387	50	Yes	1850x1600x1030	2700	Heavy	C4M or C3H	No	No
GST001/1046	Italy	110087	630	ONAN	15	±2x2.5%	0,42	17.5/95/38	1.1/-/10	50	3P	Dyn11	6	Sol. 4	N/A	Sol. 7	Ak Ao-10%	4600	540	52	Yes	1850x1800x1030	2700	Heavy	C4M or C3H	No	No
GST001/1046N	Italy	110088	630	KNAN	15	±2x2.5%	0,42	17.5/95/38	1.1/-/10	50	3P	Dyn11	6	Sol. 4	N/A	Sol. 7	Ak Ao-10%	4600	540	52	Yes	1850x1800x1030	2700	Heavy	C4M or C3H	No	No
GST001/1048	Italy	110052	100	ONAN	20	±2x2.5%	0,42	24/125/50	1.1/-/10	50	3P	Dyn11	4	Sol. 1	600	Sol. 1	Ak Ao-10%	1250	130	41	No	1600x1200x750	1250	Heavy	C4M or C3H	No	No
GST001/1048N	Italy	110053	100	KNAN	20	±2x2.5%	0,42	24/125/50	1.1/-/10	50	3P	Dyn11	4	Sol. 1	600	Sol. 1	Ak Ao-10%	1250	130	41	No	1600x1200x750	1250	Heavy	C4M or C3H	No	No
GST001/1049	Italy	110061	160	ONAN	20	±2x2.5%	0,42	24/125/50	1.1/-/10	50	3P	Dyn11	4	Sol. 1	600	Sol. 2	Ak Ao-10%	1750	189	44	Yes	1600x1350x750	1250	Heavy	C4M or C3H	No	No
GST001/1049N	Italy	110063	160	KNAN	20	±2x2.5%	0,42	24/125/50	1.1/-/10	50	3P	Dyn11	4	Sol. 1	600	Sol. 2	Ak Ao-10%	1750	189	44	Yes	1600x1350x750	1250	Heavy	C4M or C3H	No	No

GST001/1050	Italy	110055	100	ONAN	20-10	±2x2.5%	0,42	24/125/50 12/75/28	1.1/-/10	50	3P	Dyn11	4	Sol. 1	600	Sol. 1	Ak+10% A0-10%+15%	1375	150	41	No	1600x1200x750	1250	Heavy	C4M or C3H	No	No
GST001/1051	Italy	110064	160	ONAN	20-10	±2x2.5%	0,42	24/125/50 12/75/28	1.1/-/10	50	3P	Dyn11	4	Sol. 1	600	Sol. 2	Ak+10% A0-10%+15%	1925	217	44	Yes	1600x1350x750	1250	Heavy	C4M or C3H	No	No
GST001/1053	Italy	110062	160	ONAN	20	±2x2.5%	0,42	24/125/50	1.1/-/10	50	3P	Dyn11	4	Sol. 4	N/A	Sol. 2	Ak Ao-10%	1750	189	44	Yes	1600x1350x750	1250	Heavy	C4M or C3H	No	No
GST001/1054	Italy	110065	160	ONAN	20-10	±2x2.5%	0,42	24/125/50 12/75/28	1.1/-/10	50	3P	Dyn11	4	Sol. 4	N/A	Sol. 2	Ak+10% A0-10%+15%	1925	217	44	Yes	1600x1350x750	1250	Heavy	C4M or C3H	No	No
GST001/1055	Italy	110069	250	ONAN	20	±2x2.5%	0,42	24/125/50	1.1/-/10	50	3P	Dyn11	4	Sol. 4	N/A	Sol. 7	Ak Ao-10%	2350	270	47	Yes	1750x1400x800	2700	Heavy	C4M or C3H	No	No
GST001/1055N	Italy	110070	250	KNAN	20	±2x2.5%	0,42	24/125/50	1.1/-/10	50	3P	Dyn11	4	Sol. 4	N/A	Sol. 7	Ak Ao-10%	2350	270	47	Yes	1750x1400x800	2700	Heavy	C4M or C3H	No	No
GST001/1056	Italy	110081	400	ONAN	20	±2x2.5%	0,42	24/125/50	1.1/-/10	50	3P	Dyn11	4	Sol. 4	N/A	Sol. 7	Ak Ao-10%	3250	387	50	Yes	1850x1600x1030	2700	Heavy	C4M or C3H	No	No
GST001/1056N	Italy	110082	400	KNAN	20	±2x2.5%	0,42	24/125/50	1.1/-/10	50	3P	Dyn11	4	Sol. 4	N/A	Sol. 7	Ak Ao-10%	3250	387	50	Yes	1850x1600x1030	2700	Heavy	C4M or C3H	No	No
GST001/1057	Italy	110089	630	ONAN	20	±2x2.5%	0,42	24/125/50	1.1/-/10	50	3P	Dyn11	6	Sol. 4	N/A	Sol. 7	Ak Ao-10%	4600	540	52	Yes	1850x1800x1030	2700	Heavy	C4M or C3H	No	No
GST001/1057N	Italy	110090	630	KNAN	20	±2x2.5%	0,42	24/125/50	1.1/-/10	50	3P	Dyn11	6	Sol. 4	N/A	Sol. 7	Ak Ao-10%	4600	540	52	Yes	1850x1800x1030	2700	Heavy	C4M or C3H	No	No
GST001/1058	Italy	110095	250	ONAN	20-10	±2x2.5%	0,42	24/125/50 12/75/28	1.1/-/10	50	3P	Dyn11	4	Sol. 4	N/A	Sol. 7	Ak+10% A0-10%+15%	2585	311	47	Yes	1750x1400x800	2700	Heavy	C4M or C3H	No	No
GST001/1059	Italy	110083	400	ONAN	20-10	±2x2.5%	0,42	24/125/50 12/75/28	1.1/-/10	50	3P	Dyn11	4	Sol. 4	N/A	Sol. 7	Ak+10% A0-10%+15%	3575	445	50	Yes	1850x1600x1030	2700	Heavy	C4M or C3H	No	No
GST001/1060	Italy	110091	630	ONAN	20-10	±2x2.5%	0,42	24/125/50 12/75/28	1.1/-/10	50	3P	Dyn11	6	Sol. 4	N/A	Sol. 7	Ak+10% A0-10%+15%	5060	621	52	Yes	1850x1800x1030	2700	Heavy	C4M or C3H	No	No
GST001/1061	Italy	110076	250	ONAN	22	±2x2.5%	0,42	24/125/50	1.1/-/10	50	3P	Dyn11	4	Sol. 4	N/A	Sol. 2	Ak Ao-10%	2350	270	47	Yes	1800x1400x800	2700	Heavy	C4M or C3H	No	No
GST001/1062	Italy	110084	400	ONAN	22	±2x2.5%	0,42	24/125/50	1.1/-/10	50	3P	Dyn11	4	Sol. 4	N/A	Sol. 3	Ak Ao-10%	3250	387	50	Yes	1800x1400x800	2700	Heavy	C4M or C3H	No	No
GST001/1063	Italy	110092	630	ONAN	22	±2x2.5%	0,42	24/125/50	1.1/-/10	50	3P	Dyn11	6	Sol. 4	N/A	Sol. 4	Ak Ao-10%	4600	540	52	Yes	1800x1400x800	2700	Heavy	C4M or C3H	No	No
GST001/1064	Italy	110077	250	ONAN	23	±2x2.5%	0,42	24/125/50	1.1/-/10	50	3P	Dyn11	4	Sol. 4	N/A	Sol. 2	Ak Ao-10%	2350	270	47	Yes	1750x1400x800	2700	Heavy	C4M or C3H	No	No
GST001/1065	Italy	110085	400	ONAN	23	±2x2.5%	0,42	24/125/50	1.1/-/10	50	3P	Dyn11	4	Sol. 4	N/A	Sol. 3	Ak Ao-10%	3250	387	50	Yes	1850x1600x930	2700	Heavy	C4M or C3H	No	No
GST001/1066	Italy	110093	630	ONAN	23	±2x2.5%	0,42	24/125/50	1.1/-/10	50	3P	Dyn11	6	Sol. 4	N/A	Sol. 4	Ak Ao-10%	4600	540	52	Yes	1850x1800x930	2700	Heavy	C4M or C3H	No	No
GST001/1067	Italy	110078	250	ONAN	9	±2x2.5%	0,42	12/75/28	1.1/-/10	50	3P	Dyn11	4	Sol. 4	N/A	Sol. 7	Ak Ao-10%	2350	270	47	Yes	1750x1400x800	2700	Heavy	C4M or C3H	No	No
GST001/1068	Italy	110086	400	ONAN	9	±2x2.5%	0,42	12/75/28	1.1/-/10	50	3P	Dyn11	4	Sol. 4	N/A	Sol. 7	Ak Ao-10%	3250	387	50	Yes	1850x1600x1030	2700	Heavy	C4M or C3H	No	No
GST001/1069	Italy	110094	630	ONAN	9	±2x2.5%	0,42	12/75/28	1.1/-/10	50	3P	Dyn11	6	Sol. 4	N/A	Sol. 7	Ak Ao-10%	4600	540	52	Yes	1850x1800x1030	2700	Heavy	C4M or C3H	No	No
GST001/1070	Italy	110051	100	ONAN	15	±2x2.5%	0,42	17.5/95/38	1.1/-/10	50	3P	Dyn11	4	Sol. 4	N/A	Sol. 1	Ak Ao-10%	1250	130	41	No	1600x1200x750	1250	Heavy	C4M or C3H	No	No
GST001/1071	Italy	110054	100	ONAN	20	±2x2.5%	0,42	24/125/50	1.1/-/10	50	3P	Dyn11	4	Sol. 4	N/A	Sol. 1	Ak Ao-10%	1250	130	41	No	1600x1200x750	1250	Heavy	C4M or C3H	No	No
GST001/1072	Italy	110057	100	ONAN	20-10	±2x2.5%	0,42	24/125/50 12/75/28	1.1/-/10	50	3P	Dyn11	4	Sol. 4	N/A	Sol. 1	Ak+10% A0-10%+15%	1375	150	41	No	1600x1200x750	1250	Heavy	C4M or C3H	No	No
GST001/1073	Italy	110056	100	ONAN	23	±2x2.5%	0,42	24/125/50	1.1/-/10	50	3P	Dyn11	4	Sol. 1	600	Sol. 1	Ak Ao-10%	1250	130	41	No	1600x1200x750	1250	Heavy	C4M or C3H	No	No

GST001/1074	Italy	110066	160	ONAN	23	±2x2.5%	0,42	24/125/50	1.1/-/10	50	3P	Dyn11	4	Sol. 1	600	Sol. 2	Ak Ao-10%	1750	189	44	Yes	1600x1350x750	1250	Heavy	C4M or C3H	No	No
GST001/1075	Italy	110071	160	ONAN	20-8,4	20 (±2x2.5%) 8,4 (±2x3%)	0,420-0,242	24/125/50 12/75/28	1.1/-/10	50	3P	Dyn11	4 (20 kV) 4,5 (8,4 kV)	Sol. 1	600	Sol. 2	Ak+20% A0-10%+20%	2100	227	44	Yes	1600x1350x750	1250	Heavy	C4M or C3H	No	No
GST001/1076	Italy	110072	160	ONAN	20-8,4	20 (±2x2.5%) 8,4 (±2x3%)	0,420-0,242	24/125/50 12/75/28	1.1/-/10	50	3P	Dyn11	4 (20 kV) 4,5 (8,4 kV)	Sol. 4	N/A	Sol. 2	Ak+20% A0-10%+20%	2100	227	44	Yes	1600x1350x750	1250	Heavy	C4M or C3H	No	No
GST001/1077	Italy	110073	250	ONAN	20-8,4	20 (±2x2.5%) 8,4 (±2x3%)	0,420-0,242	24/125/50 12/75/28	1.1/-/10	50	3P	Dyn11	4 (20 kV) 4,5 (8,4 kV)	Sol. 4	N/A	Sol. 7	Ak+20% A0-10%+20%	2820	324	47	Yes	1750x1400x800	2700	Heavy	C4M or C3H	No	No
GST001/1078	Italy	110074	400	ONAN	20-8,4	20 (±2x2.5%) 8,4 (±2x3%)	0,420-0,242	24/125/50 12/75/28	1.1/-/10	50	3P	Dyn11	4 (20 kV) 4,5 (8,4 kV)	Sol. 4	N/A	Sol. 7	Ak+20% A0-10%+20%	3900	464	50	Yes	1850x1600x1030	2700	Heavy	C4M or C3H	No	No
GST001/1079	Italy	110075	630	ONAN	20-8,4	20 (±2x2.5%) 8,4 (±2x3%)	0,420-0,242	24/125/50 12/75/28	1.1/-/10	50	3P	Dyn11	6 (20 kV) 6,2 (8,4 kV)	Sol. 4	N/A	Sol. 7	Ak+20% A0-10%+20%	5520	648	52	Yes	1850x1800x1030	2700	Heavy	C4M or C3H	No	No
GST001/1080	Italy	110154	250	ONAN	27	±2x2.5%	0,42	36/170/70	1.1/-/10	50	3P	Dyn11	4	Sol. 4	N/A	Sol. 7	Ak+10% Ao-10%+15%	2585	311	51	Yes	1750x1400x800	2700	Heavy	C4M or C3H	No	No
GST001/1081	Italy	110155	400	ONAN	27	±2x2.5%	0,42	36/170/70	1.1/-/10	50	3P	Dyn11	4	Sol. 4	N/A	Sol. 7	Ak+10% Ao-10%+15%	3575	445	54	Yes	1850x1600x1030	2700	Heavy	C4M or C3H	No	No
GST001/1082	Italy	110156	630	ONAN	27	±2x2.5%	0,42	36/170/70	1.1/-/10	50	3P	Dyn11	6	Sol. 4	N/A	Sol. 7	Ak+10% Ao-10%+15%	5060	621	56	Yes	1850x1800x1030	2700	Heavy	C4M or C3H	No	No
GST001/1083	Italy	110113	100/50/50	ONAN	15	±2x2.5%	0,90 (BT1) 0,42 (BT2)	17.5/95/38	1.1/-/10	50	3P	D,yn11,yn11	4 (AT/BT1) 4 (AT/BT2)	Sol. 1	600	Sol. 1	Ak(+10%) A0-10%(+15%)	1375	149,50	41	No	1500x1200x750	1250	Heavy	C4M or C3H	No	No
GST001/1084	Italy	110112	160/50/110	ONAN	15	±2x2.5%	0,90 (BT1) 0,42 (BT2)	17.5/95/38	1.1/-/10	50	3P	D,yn11,yn11	4 (AT/BT1) 4 (AT/BT2)	Sol. 1	600	Sol. 1	Ak(+10%) A0-10%(+15%)	1925	217,35	44	Yes	1600x1350x750	1250	Heavy	C4M or C3H	No	No
GST001/1085	Italy	110111	160/110/50	ONAN	15	±2x2.5%	0,90 (BT1) 0,42 (BT2)	17.5/95/38	1.1/-/10	50	3P	D,yn11,yn11	4 (AT/BT1) 4 (AT/BT2)	Sol. 1	600	Sol. 1	Ak(+10%) A0-10%(+15%)	1925	217,35	44	Yes	1600x1350x750	1250	Heavy	C4M or C3H	No	No
GST001/1086	Italy	110110	160/50/110	ONAN	15	±2x2.5%	0,90 (BT1) 0,42 (BT2)	17.5/95/38	1.1/-/10	50	3P	D,yn11,yn11	4 (AT/BT1) 4 (AT/BT2)	Sol. 4	N/A	Sol. 1	Ak(+10%) A0-10%(+15%)	1925	217,35	44	Yes	1600x1350x750	1250	Heavy	C4M or C3H	No	No
GST001/1087	Italy	110109	250/100/150	ONAN	15	±2x2.5%	0,90 (BT1) 0,42 (BT2)	17.5/95/38	1.1/-/10	50	3P	D,yn11,yn11	4 (AT/BT1) 4 (AT/BT2)	Sol. 4	N/A	Sol. 1 o 2 (BT1) Sol. 2 (BT2)	Ak(+10%) A0-10%(+15%)	2585	310,50	47	Yes	1750x1400x800	2700	Heavy	C4M or C3H	No	No
GST001/1088	Italy	110108	100/50/50	ONAN	20	±2x2.5%	0,90 (BT1) 0,42 (BT2)	24/125/50	1.1/-/10	50	3P	D,yn11,yn11	4 (AT/BT1) 4 (AT/BT2)	Sol. 1	600	Sol. 1	Ak(+10%) A0-10%(+15%)	1375	149,50	41	No	1500x1200x750	1250	Heavy	C4M or C3H	No	No
GST001/1089	Italy	110107	160/50/110	ONAN	20	±2x2.5%	0,90 (BT1) 0,42 (BT2)	24/125/50	1.1/-/10	50	3P	D,yn11,yn11	4 (AT/BT1) 4 (AT/BT2)	Sol. 1	600	Sol. 1	Ak(+10%) A0-10%(+15%)	1925	217,35	44	Yes	1600x1350x750	1250	Heavy	C4M or C3H	No	No

GST001/1090	Italy	110105	160/110/50	ONAN	20	±2x2.5%	0,90 (BT1) 0,42 (BT2)	24/125/50	1.1/-/10	50	3P	D,yn11,yn11	4 (AT/BT1) 4 (AT/BT2)	Sol. 1	600	Sol. 1	Ak(+10%) A0-10%(+15%)	1925	217,35	44	Yes	1600x1350x750	1250	Heavy	C4M or C3H	No	No
GST001/1091	Italy	110106	160/50/110	ONAN	20	±2x2.5%	0,90 (BT1) 0,42 (BT2)	24/125/50	1.1/-/10	50	3P	D,yn11,yn11	4 (AT/BT1) 4 (AT/BT2)	Sol. 4	N/A	Sol. 1	Ak(+10%) A0-10%(+15%)	1925	217,35	44	Yes	1600x1350x750	1250	Heavy	C4M or C3H	No	No
GST001/1092	Italy	110098	250/100/150	ONAN	20	±2x2.5%	0,90 (BT1) 0,42 (BT2)	24/125/50	1.1/-/10	50	3P	D,yn11,yn11	4 (AT/BT1) 4 (AT/BT2)	Sol. 4	N/A	Sol. 1 o 2 (BT1) Sol. 2 (BT2)	Ak(+10%) A0-10%(+15%)	2585	310,50	47	Yes	1750x1400x800	2700	Heavy	C4M or C3H	No	No
GST001/1093	Italy	110104	50	ONAN	15	±2x2.5%	0,90	17.5/95/38	1.1/-/10	50	3P	Dyn11	4	Sol. 1	600	Sol. 1	Ak Ao-10%	750	81	39	No	1500x1200x750	1250	Heavy	C4M or C3H	No	No
GST001/1094	Italy	110103	50	ONAN	20	±2x2.5%	0,90	24/125/50	1.1/-/10	50	3P	Dyn11	4	Sol. 1	600	Sol. 1	Ak Ao-10%	750	81	39	No	1500x1200x750	1250	Heavy	C4M or C3H	No	No
GST001/1095	Italy	110102	25	ONAN	0,90	±2x2.5%	0,42	1.1/-/10	1.1/-/10	50	3P	Yn,zn11	2	Sol. 1 (BT Bushing - ref. GS p. 6.5.2)	N/A	Sol. 1	Ak Ao-10%	600	63	37	No	1500x1200x750	1250	Heavy	C4M or C3H	No	No
GST001/1096	Italy	110101	50	ONAN	0,90	±2x2.5%	0,42	1.1/-/10	1.1/-/10	50	3P	Yn,zn11	2	Sol. 1 (BT Bushing - ref. GS p. 6.5.2)	N/A	Sol. 1	Ak Ao-10%	750	81	39	No	1500x1200x750	1250	Heavy	C4M or C3H	No	No
GST001/1097	Italy	110100	100	ONAN	0,90	±2x2.5%	0,42	1.1/-/10	1.1/-/10	50	3P	Yn,zn11	2	Sol. 1 (BT Bushing - ref. GS p. 6.5.2)	N/A	Sol. 1	Ak Ao-10%	1250	130	41	No	1500x1200x750	1250	Heavy	C4M or C3H	No	No
GST001/1098	Italy	110099	50	ONAN	0,42	±2x2.5%	0,90	1.1/-/10	1.1/-/10	50	3P	Yn,yn0	2	Sol. 1 (BT Bushing - ref. GS p. 6.5.2)	N/A	Sol. 1	Ak Ao-10%	750	81	39	No	1500x1200x750	1250	Heavy	C4M or C3H	No	No
GST001/1119	Romania	110047	50	ONAN	20	±2x2.5%	0,42	24/125/50	1.1/-/10	50	3P	Dyn11	4	Sol. 1	600	Sol. 1	Ak Ao-10%	750	81	39	No	1500x1200x750	1250	Heavy	C4M or C3H	No	No
GST001/1119N	Romania	110048	50	KNAN	20	±2x2.5%	0,42	24/125/50	1.1/-/10	50	3P	Dyn11	4	Sol. 1	600	Sol. 1	Ak Ao-10%	750	81	39	No	1500x1200x750	1250	Heavy	C4M or C3H	No	No
GST001/1120	Romania	110049	100	ONAN	20	±2x2.5%	0,42	24/125/50	1.1/-/10	50	3P	Dyn11	4	Sol. 1	600	Sol. 1	Ak Ao-10%	1250	130	41	No	1600x1200x750	1250	Heavy	C4M or C3H	No	No
GST001/1120N	Romania	110050	100	KNAN	20	±2x2.5%	0,42	24/125/50	1.1/-/10	50	3P	Dyn11	4	Sol. 1	600	Sol. 1	Ak Ao-10%	1250	130	41	No	1600x1200x750	1250	Heavy	C4M or C3H	No	No
GST001/1121	Romania	110051	160	ONAN	20	±2x2.5%	0,42	24/125/50	1.1/-/10	50	3P	Dyn11	4	Sol. 1	600	Sol. 2	Ak Ao-10%	1750	189	44	Yes	1600x1350x750	1250	Heavy	C4M or C3H	No	No
GST001/1121N	Romania	110052	160	KNAN	20	±2x2.5%	0,42	24/125/50	1.1/-/10	50	3P	Dyn11	4	Sol. 1	600	Sol. 2	Ak Ao-10%	1750	189	44	Yes	1600x1350x750	1250	Heavy	C4M or C3H	No	No

GST001/1122	Romania	110053	250	ONAN	20	±2x2.5%	0,42	24/125/50	1.1/-/10	50	3P	Dyn11	4	Sol. 1	600	Sol. 2	Ak Ao-10%	2350	270	47	Yes	1750x1400x800	2700	Heavy	C4M or C3H	No	No
GST001/1122N	Romania	110055	250	KNAN	20	±2x2.5%	0,42	24/125/50	1.1/-/10	50	3P	Dyn11	4	Sol. 1	600	Sol. 2	Ak Ao-10%	2350	270	47	Yes	1750x1400x800	2700	Heavy	C4M or C3H	No	No
GST001/1123	Romania	110056	100	ONAN	20-10	±2x2.5%	0,42	24/125/50 12/75/28	1.1/-/10	50	3P	Dyn11	4	Sol. 1	600	Sol. 1	Ak+10% A0-10%+15%	1375	150	41	No	1600x1200x750	1250	Heavy	C4M or C3H	No	No
GST001/1123N	Romania	110073	100	KNAN	20-10	±2x2.5%	0,42	24/125/50 12/75/28	1.1/-/10	50	3P	Dyn11	4	Sol. 1	600	Sol. 1	Ak+10% A0-10%+15%	1375	150	41	No	1600x1200x750	1250	Heavy	C4M or C3H	No	No
GST001/1124	Romania	110057	160	ONAN	20-10	±2x2.5%	0,42	24/125/50 12/75/28	1.1/-/10	50	3P	Dyn11	4	Sol. 1	600	Sol. 2	Ak+10% A0-10%+15%	1925	217,35	44	Yes	1600x1350x750	1250	Heavy	C4M or C3H	No	No
GST001/1124N	Romania	110074	160	KNAN	20-10	±2x2.5%	0,42	24/125/50 12/75/28	1.1/-/10	50	3P	Dyn11	4	Sol. 1	600	Sol. 2	Ak+10% A0-10%+15%	1925	217,35	44	Yes	1600x1350x750	1250	Heavy	C4M or C3H	No	No
GST001/1125	Romania	110058	160	ONAN	20	±2x2.5%	0,42	24/125/50	1.1/-/10	50	3P	Dyn11	4	Sol. 4	N/A	Sol. 2	Ak Ao-10%	1750	189	44	Yes	1600x1350x750	1250	Heavy	C4M or C3H	No	No
GST001/1125N	Romania	110075	160	KNAN	20	±2x2.5%	0,42	24/125/50	1.1/-/10	50	3P	Dyn11	4	Sol. 4	N/A	Sol. 2	Ak Ao-10%	1750	189	44	Yes	1600x1350x750	1250	Heavy	C4M or C3H	No	No
GST001/1126	Romania	110059	160	ONAN	20-10	±2x2.5%	0,42	24/125/50 12/75/28	1.1/-/10	50	3P	Dyn11	4	Sol. 4	N/A	Sol. 2	Ak+10% A0-10%+15%	1925	217,35	44	Yes	1600x1350x750	1250	Heavy	C4M or C3H	No	No
GST001/1126N	Romania	110076	160	KNAN	20-10	±2x2.5%	0,42	24/125/50 12/75/28	1.1/-/10	50	3P	Dyn11	4	Sol. 4	N/A	Sol. 2	Ak+10% A0-10%+15%	1925	217,35	44	Yes	1600x1350x750	1250	Heavy	C4M or C3H	No	No
GST001/1127	Romania	110060	250	ONAN	20	±2x2.5%	0,42	24/125/50	1.1/-/10	50	3P	Dyn11	4	Sol. 4	N/A	Sol. 7	Ak Ao-10%	2350	270	47	Yes	1750x1400x800	2700	Heavy	C4M or C3H	No	No
GST001/1127N	Romania	110077	250	KNAN	20	±2x2.5%	0,42	24/125/50	1.1/-/10	50	3P	Dyn11	4	Sol. 4	N/A	Sol. 7	Ak Ao-10%	2350	270	47	Yes	1750x1400x800	2700	Heavy	C4M or C3H	No	No
GST001/1128	Romania	110061	400	ONAN	20	±2x2.5%	0,42	24/125/50	1.1/-/10	50	3P	Dyn11	4	Sol. 4	N/A	Sol. 7	Ak Ao-10%	3250	387	50	Yes	1850x1600x1030	2700	Heavy	C4M or C3H	No	No
GST001/1128N	Romania	110078	400	KNAN	20	±2x2.5%	0,42	24/125/50	1.1/-/10	50	3P	Dyn11	4	Sol. 4	N/A	Sol. 7	Ak Ao-10%	3250	387	50	Yes	1850x1600x1030	2700	Heavy	C4M or C3H	No	No
GST001/1128S	Romania	110062	400	KNAN	20	±2x2.5%	0,42	24/125/50	1.1/-/10	50	3P	Dyn11	4	Sol. 4	N/A	Sol. 7	Ak Ao-10%	3250	387	50	Yes	1850x1600x1030	2700	Heavy	C4M or C3H	No	No
GST001/1129	Romania	110063	630	ONAN	20	±2x2.5%	0,42	24/125/50	1.1/-/10	50	3P	Dyn11	6	Sol. 4	N/A	Sol. 7	Ak Ao-10%	4600	540	52	Yes	1850x1800x1030	2700	Heavy	C4M or C3H	No	No
GST001/1129N	Romania	110079	630	KNAN	20	±2x2.5%	0,42	24/125/50	1.1/-/10	50	3P	Dyn11	6	Sol. 4	N/A	Sol. 7	Ak Ao-10%	4600	540	52	Yes	1850x1800x1030	2700	Heavy	C4M or C3H	No	No
GST001/1129S	Romania	110054	630	KNAN	20	±2x2.5%	0,42	24/125/50	1.1/-/10	50	3P	Dyn11	6	Sol. 4	N/A	Sol. 7	Ak Ao-10%	4600	540	52	Yes	1850x1800x1030	2700	Heavy	C4M or C3H	No	No
GST001/1130	Romania	110072	250	ONAN	20-10	±2x2.5%	0,42	24/125/50 12/75/28	1.1/-/10	50	3P	Dyn11	4	Sol. 4	N/A	Sol. 7	Ak+10% A0-10%+15%	2585	310,5	47	Yes	1750x1400x800	2700	Heavy	C4M or C3H	No	No
GST001/1130N	Romania	110080	250	KNAN	20-10	±2x2.5%	0,42	24/125/50 12/75/28	1.1/-/10	50	3P	Dyn11	4	Sol. 4	N/A	Sol. 7	Ak+10% A0-10%+15%	2585	310,5	47	Yes	1750x1400x800	2700	Heavy	C4M or C3H	No	No
GST001/1131	Romania	110064	400	ONAN	20-10	±2x2.5%	0,42	24/125/50 12/75/28	1.1/-/10	50	3P	Dyn11	4	Sol. 4	N/A	Sol. 7	Ak+10% A0-10%+15%	3575	445,05	50	Yes	1850x1600x1030	2700	Heavy	C4M or C3H	No	No
GST001/1131N	Romania	110081	400	KNAN	20-10	±2x2.5%	0,42	24/125/50 12/75/28	1.1/-/10	50	3P	Dyn11	4	Sol. 4	N/A	Sol. 7	Ak+10% A0-10%+15%	3575	445,05	50	Yes	1850x1600x1030	2700	Heavy	C4M or C3H	No	No
GST001/1131S	Romania	110065	400	KNAN	20-10	±2x2.5%	0,42	24/125/50 12/75/28	1.1/-/10	50	3P	Dyn11	4	Sol. 4	N/A	Sol. 7	Ak+10% A0-10%+15%	3575	445,05	50	Yes	1850x1600x1030	2700	Heavy	C4M or C3H	No	No
GST001/1132	Romania	110066	630	ONAN	20-10	±2x2.5%	0,42	24/125/50 12/75/28	1.1/-/10	50	3P	Dyn11	6	Sol. 4	N/A	Sol. 7	Ak+10% A0-10%+15%	5060	621	52	Yes	1850x1800x1030	2700	Heavy	C4M or C3H	No	No
GST001/1132N	Romania	110082	630	KNAN	20-10	±2x2.5%	0,42	24/125/50 12/75/28	1.1/-/10	50	3P	Dyn11	6	Sol. 4	N/A	Sol. 7	Ak+10% A0-10%+15%	5060	621	52	Yes	1850x1800x1030	2700	Heavy	C4M or C3H	No	No
GST001/1132S	Romania	110067	630	KNAN	20-10	±2x2.5%	0,42	24/125/50 12/75/28	1.1/-/10	50	3P	Dyn11	6	Sol. 4	N/A	Sol. 7	Ak+10% A0-10%+15%	5060	621	52	Yes	1850x1800x1030	2700	Heavy	C4M or C3H	No	No

GST001/1133	Romania	110068	800	ONAN	20	±2x2.5%	0,42	24/125/50	1.1/-/10	50	3P	Dyn11	6	Sol. 4	N/A	Sol. 7	Ak Ao-10%	6000	585	53	Yes	1950x1850x1000	no specific limits	Heavy	C4M or C3H	No	No
GST001/1133N	Romania	110142	800	KNAN	20	±2x2.5%	0,42	24/125/50	1.1/-/10	50	3P	Dyn11	6	Sol. 4	N/A	Sol. 7	Ak Ao-10%	6000	585	53	Yes	1950x1850x1000	no specific limits	Heavy	C4M or C3H	No	No
GST001/1134	Romania	110069	800	ONAN	20-10	±2x2.5%	0,42	24/125/50 12/75/28	1.1/-/10	50	3P	Dyn11	6	Sol. 4	N/A	Sol. 7	Ak+10% A0-10%+15%	6600	673	53	Yes	1950x1850x1000	no specific limits	Heavy	C4M or C3H	No	No
GST001/1134N	Romania	110143	800	KNAN	20-10	±2x2.5%	0,42	24/125/50 12/75/28	1.1/-/10	50	3P	Dyn11	6	Sol. 4	N/A	Sol. 7	Ak+10% A0-10%+15%	6600	673	53	Yes	1950x1850x1000	no specific limits	Heavy	C4M or C3H	No	No
GST001/1135	Romania	110070	1000	ONAN	20	±2x2.5%	0,42	24/125/50	1.1/-/10	50	3P	Dyn11	6	Sol. 4	N/A	Sol. 7	Ak Ao-10%	7600	693	55	Yes	2080x1990x1190	no specific limits	Heavy	C4M or C3H	No	No
GST001/1135N	Romania	110144	1000	KNAN	20	±2x2.5%	0,42	24/125/50	1.1/-/10	50	3P	Dyn11	6	Sol. 4	N/A	Sol. 7	Ak Ao-10%	7600	693	55	Yes	2080x1990x1190	no specific limits	Heavy	C4M or C3H	No	No
GST001/1136	Romania	110071	1000	ONAN	20-10	±2x2.5%	0,42	24/125/50 12/75/28	1.1/-/10	50	3P	Dyn11	6	Sol. 4	N/A	Sol. 7	Ak+10% A0-10%+15%	8360	796,95	55	Yes	2080x1990x1190	no specific limits	Heavy	C4M or C3H	No	No
GST001/1136N	Romania	110145	1000	KNAN	20-10	±2x2.5%	0,42	24/125/50 12/75/28	1.1/-/10	50	3P	Dyn11	6	Sol. 4	N/A	Sol. 7	Ak+10% A0-10%+15%	8360	796,95	55	Yes	2080x1990x1190	no specific limits	Heavy	C4M or C3H	No	No
GST001/1140	Romania	110106	50	ONAN	20	±2x2.5%	1	24/125/50	1.1/-/10	50	3P	Dyn11	4	Sol. 1	600	Sol. 1	Ak Ao-10%	750	81	39	No	1500x1200x750	≤ 1250	Heavy	C4M or C3H	No	No
GST001/1140N	Romania	110089	50	KNAN	20	±2x2.5%	1	24/125/50	1.1/-/10	50	3P	Dyn11	4	Sol. 1	600	Sol. 1	Ak Ao-10%	750	81	39	No	1500x1200x750	≤ 1250	Heavy	C4M or C3H	No	No
GST001/1141	Romania	110088	50	ONAN	1	±2x2.5%	0,42	1.1/-/10	1.1/-/10	50	3P	Dyn11	4	Sol. 1 (BT Bushing - ref. GS p. 6.5.2)	N/A	Sol. 1	Ak Ao-10%	750	81	39	No	1500x1200x750	≤ 1250	Heavy	C4M or C3H	No	No
GST001/1141N	Romania	110090	50	KNAN	1	±2x2.5%	0,42	1.1/-/10	1.1/-/10	50	3P	Dyn11	4	Sol. 1 (BT Bushing - ref. GS p. 6.5.2)	N/A	Sol. 1	Ak Ao-10%	750	81	39	No	1500x1200x750	≤ 1250	Heavy	C4M or C3H	No	No
GST001/1142	Romania	110107	250	ONAN	6	±2x2.5%	0,42	7,2/60/20	1.1/-/10	50	3P	Dyn11	4	Sol. 1	600	Sol. 1	Ak Ao-10%	2350	270	47	Yes	1750x1400x800	≤ 2700	Heavy	C4M or C3H	No	No
GST001/1142N	Romania	110091	250	KNAN	6	±2x2.5%	0,42	7,2/60/20	1.1/-/10	50	3P	Dyn11	4	Sol. 1	600	Sol. 1	Ak Ao-10%	2350	270	47	Yes	1750x1400x800	≤ 2700	Heavy	C4M or C3H	No	No
GST001/1143	Romania	110092	400	ONAN	20	±2x2.5%	0,42	24/125/50	1.1/-/10	50	3P	Dyn11	4	Sol. 1	600	Sol.1	Ak Ao-10%	3250	387	50	Yes	1850x1600x1030	≤ 2700	Heavy	C4M or C3H	No	No
GST001/1143S	Romania	110093	400	KNAN	20	±2x2.5%	0,42	24/125/50	1.1/-/10	50	3P	Dyn11	4	Sol. 1	600	Sol.1	Ak Ao-10%	3250	387	50	Yes	1850x1600x1030	≤ 2700	Heavy	C4M or C3H	No	No
GST001/1144	Romania	110095	630	ONAN	6	±2x2.5%	0,42	7,2/60/20	1.1/-/10	50	3P	Dyn11	6	Sol. 4	N/A	Sol. 1	Ak Ao-10%	4600	540	52	Yes	1850x1800x1030	≤ 2700	Heavy	C4M or C3H	No	No
GST001/1144S	Romania	110094	630	KNAN	6	±2x2.5%	0,42	7,2/60/20	1.1/-/10	50	3P	Dyn11	6	Sol. 4	N/A	Sol. 1	Ak Ao-10%	4600	540	52	Yes	1850x1800x1030	≤ 2700	Heavy	C4M or C3H	No	No
GST001/1145	Romania	110096	630	ONAN	10	±2x2.5%	0,42	12/75/28	1.1/-/10	50	3P	Dyn11	6	Sol. 1	600	Sol. 1	Ak Ao-10%	4600	540	52	Yes	1850x1800x1030	≤ 2700	Heavy	C4M or C3H	No	No

GST001/1145S	Romania	110097	630	KNAN	10	±2x2.5%	0,42	12/75/28	1.1/-/10	50	3P	Dyn11	6	Sol. 1	600	Sol. 1	Ak Ao-10%	4600	540	52	Yes	1850x1800x1030	≤ 2700	Heavy	C4M or C3H	No	No
GST001/1146	Romania	110098	1000	ONAN	20	±2x2.5%	6	24/125/50	7,2/60/20	50	3P	Dyn11	6	Sol. 1	600	Sol. 1 MV bushing type (ref. GS p. 6.5.1)	Ak Ao-10%	7600	693	55	Yes	2080x1990x1190	no specific limits	Heavy	C4M or C3H	No	No
GST001/1146N	Romania	110099	1000	KNAN	20	±2x2.5%	6	24/125/50	7,2/60/20	50	3P	Dyn11	6	Sol. 1	600	Sol. 1 MV bushing type (ref. GS p. 6.5.1)	Ak Ao-10%	7600	693	55	Yes	2080x1990x1190	no specific limits	Heavy	C4M or C3H	No	No
GST001/1147	Romania	110100	1250	ONAN	20	±2x2.5%	0,42	24/125/50	1.1/-/10	50	3P	Dyn11	6	Sol. 1	600	Sol. 1	Ak Ao-10%	9500	855	56	Yes	2000x1800x1100	no specific limits	Heavy	C4M or C3H	No	No
GST001/1147N	Romania	110101	1250	KNAN	20	±2x2.5%	0,42	24/125/50	1.1/-/10	50	3P	Dyn11	6	Sol. 1	600	Sol. 1	Ak Ao-10%	9500	855	56	Yes	2000x1800x1100	no specific limits	Heavy	C4M or C3H	No	No
GST001/1148	Romania	110102	1600	ONAN	20	±2x2.5%	0,42	24/125/50	1.1/-/10	50	3P	Dyn11	6	Sol. 1	600	Sol. 1	Ak Ao-10%	12000	1080	58	Yes	2080x2040x1230	no specific limits	Heavy	C4M or C3H	No	No
GST001/1148N	Romania	110104	1600	KNAN	20	±2x2.5%	0,42	24/125/50	1.1/-/10	50	3P	Dyn11	6	Sol. 1	600	Sol. 1	Ak Ao-10%	12000	1080	58	Yes	2080x2040x1230	no specific limits	Heavy	C4M or C3H	No	No
GST001/1149	Romania	110103	1600	ONAN	20	±2x2.5%	6	24/125/50	7,2/60/20	50	3P	Dyn11	6	Sol. 1	600	Sol. 1 MV bushing type (ref. GS p. 6.5.1)	Ak Ao-10%	12000	1080	58	Yes	2080x2040x1230	no specific limits	Heavy	C4M or C3H	No	No
GST001/1149N	Romania	110105	1600	KNAN	20	±2x2.5%	6	24/125/50	7,2/60/20	50	3P	Dyn11	6	Sol. 1	600	Sol. 1 MV bushing type (ref. GS p. 6.5.1)	Ak Ao-10%	12000	1080	58	Yes	2080x2040x1230	no specific limits	Heavy	C4M or C3H	No	No
GST001/1150	Romania	110109	400	ONAN	6	±2x2.5%	0,42	7,2/60/20	1.1/-/10	50	3P	Dyn11	4	Sol.4	N/A	Sol.1	Ak Ao-10%	3250	387	50	Yes	1850x1600x1030	≤ 2700	Heavy	C4M or C3H	No	No
GST001/1150S	Romania	110110	400	KNAN	6	±2x2.5%	0,42	7,2/60/20	1.1/-/10	50	3P	Dyn11	4	Sol.4	N/A	Sol.1	Ak Ao-10%	3250	387	50	Yes	1850x1600x1030	≤ 2700	Heavy	C4M or C3H	No	No
GST001/1151	Romania	110111	400	ONAN	6	±2x2.5%	0,42	7,2/60/20	1.1/-/10	50	3P	Dyn11	4	Sol. 1	600	Sol.1	Ak Ao-10%	3250	387	50	Yes	1850x1600x1030	≤ 2700	Heavy	C4M or C3H	No	No
GST001/1151S	Romania	110112	400	KNAN	6	±2x2.5%	0,42	7,2/60/20	1.1/-/10	50	3P	Dyn11	4	Sol. 1	600	Sol.1	Ak Ao-10%	3250	387	50	Yes	1850x1600x1030	≤ 2700	Heavy	C4M or C3H	No	
GST001/1152	Romania	110113	160	ONAN	6	±2x2.5%	0,42	7,2/60/20	1.1/-/10	50	3P	Dyn11	4	Sol. 1	600	Sol. 1	Ak Ao-10%	1750	189	44	No	1600x1350x750	≤ 1250	Heavy	C4M or C3H	No	No
GST001/1152N	Romania	110114	160	KNAN	6	±2x2.5%	0,42	7,2/60/20	1.1/-/10	50	3P	Dyn11	4	Sol. 1	600	Sol. 1	Ak Ao-10%	1750	189	44	No	1600x1350x750	≤ 1250	Heavy	C4M or C3H	No	No

GST001/1153	Romania	110115	100	ONAN	6	±2x2.5%	0,42	7,2/60/20	1.1/-/10	50	3P	Dyn11	4	Sol. 1	600	Sol. 1	Ak Ao-10%	1250	130	41	No	1600x1200x750	≤ 2700	Heavy	C4M or C3H	No	No
GST001/1153N	Romania	110116	100	KNAN	6	±2x2.5%	0,42	7,2/60/20	1.1/-/10	50	3P	Dyn11	4	Sol. 1	600	Sol. 1	Ak Ao-10%	1250	130	41	No	1600x1200x750	≤ 2700	Heavy	C4M or C3H	No	No
GST001/1154	Romania	110117	100	ONAN	20	±2x2.5%	1	24/125/50	1.1/-/10	50	3P	Dyn11	4	Sol. 1	600	Sol. 1	Ak Ao-10%	1250	130	41	No	1500x1200x750	≤ 1250	Heavy	C4M or C3H	No	No
GST001/1154N	Romania	110118	100	KNAN	20	±2x2.5%	1	24/125/50	1.1/-/10	50	3P	Dyn11	4	Sol. 1	600	Sol. 1	Ak Ao-10%	1250	130	41	No	1500x1200x750	≤ 1250	Heavy	C4M or C3H	No	No
GST001/1155	Romania	110119	25	ONAN	1	±2x2.5%	0,42	1.1/-/10	1.1/-/10	50	3P	Dyn11	4	Sol. 1	600	Sol. 1	Ak Ao-10%	600	63	37	No	1350x1120x710	≤ 1250	Heavy	C4M or C3H	No	No
GST001/1156	Romania	110120	400	ONAN	10	±2x2.5%	0,42	12/75/28	1.1/-/10	50	3P	Dyn11	4	Sol. 1	600	Sol.1	Ak Ao-10%	3250	387	50	Yes	1850x1600x1030	≤ 2700	Heavy	C4M or C3H	No	No
GST001/1156S	Romania	110121	400	KNAN	10	±2x2.5%	0,42	12/75/28	1.1/-/10	50	3P	Dyn11	4	Sol. 1	600	Sol.1	Ak Ao-10%	3250	387	50	Yes	1850x1600x1030	≤ 2700	Heavy	C4M or C3H	No	No
GST001/1157	Romania	110122	250	ONAN	10	±2x2.5%	0,42	12/75/28	1.1/-/10	50	3P	Dyn11	4	Sol. 1	600	Sol. 1	Ak Ao-10%	2350	270	47	Yes	1750x1400x800	≤ 2700	Heavy	C4M or C3H	No	No
GST001/1157N	Romania	110123	250	KNAN	10	±2x2.5%	0,42	12/75/28	1.1/-/10	50	3P	Dyn11	4	Sol. 1	600	Sol. 1	Ak Ao-10%	2350	270	47	Yes	1750x1400x800	≤ 2700	Heavy	C4M or C3H	No	No
GST001/1158	Romania	110124	50	ONAN	6	±2x2.5%	0,42	7,2/60/20	1.1/-/10	50	3P	Dyn11	4	Sol. 1	600	Sol. 1	Ak Ao-10%	750	81	39	No	1500x1200x750	≤ 1250	Heavy	C4M or C3H	No	No
GST001/1158N	Romania	110125	50	KNAN	6	±2x2.5%	0,42	7,2/60/20	1.1/-/10	50	3P	Dyn11	4	Sol. 1	600	Sol. 1	Ak Ao-10%	750	81	39	No	1500x1200x750	≤ 1250	Heavy	C4M or C3H	No	No
GST001/1159	Romania	110126	630	ONAN	6	±2x2.5%	0,42	7,2/60/20	1.1/-/10	50	3P	Dyn11	6	Sol. 4	N/A	Sol. 1	Ak Ao-10%	4600	540	52	Yes	1850x1600x1030	≤ 2700	Heavy	C4M or C3H	No	No
GST001/1159S	Romania	110127	630	KNAN	6	±2x2.5%	0,42	7,2/60/20	1.1/-/10	50	3P	Dyn11	6	Sol. 4	N/A	Sol. 1	Ak Ao-10%	4600	540	52	Yes	1850x1600x1030	≤ 2700	Heavy	C4M or C3H	No	No
GST001/1160	Romania	110128	1000	ONAN	6	±2x2.5%	0,42	7,2/60/20	1.1/-/10	50	3P	Dyn11	6	Sol. 1	600	Sol. 1	Ak Ao-10%	7600	693	55	Yes	2080x1990x1190	no specific limits	Heavy	C4M or C3H	No	No
GST001/1160N	Romania	110129	1000	KNAN	6	±2x2.5%	0,42	7,2/60/20	1.1/-/10	50	3P	Dyn11	6	Sol. 1	600	Sol. 1	Ak Ao-10%	7600	693	55	Yes	2080x1990x1190	no specific limits	Heavy	C4M or C3H	No	No
GST001/1161	Romania	110130	1600	ONAN	6	±2x2.5%	0,42	7,2/60/20	1.1/-/10	50	3P	Dyn11	6	Sol. 1	600	Sol. 1	Ak Ao-10%	12000	1080	58	Yes	2080x2040x1230	no specific limits	Heavy	C4M or C3H	No	No
GST001/1161N	Romania	110131	1600	KNAN	6	±2x2.5%	0,42	7,2/60/20	1.1/-/10	50	3P	Dyn11	6	Sol. 1	600	Sol. 1	Ak Ao-10%	12000	1080	58	Yes	2080x2040x1230	no specific limits	Heavy	C4M or C3H	No	No
GST001/1162	Romania	110132	100	ONAN	10	±2x2.5%	0,42	12/75/28	1.1/-/10	50	3P	Dyn11	4	Sol. 1	600	Sol. 1	Ak Ao-10%	1250	130	41	No	1500x1200x750	≤ 1250	Heavy	C4M or C3H	No	No
GST001/1162N	Romania	110133	100	KNAN	10	±2x2.5%	0,42	12/75/28	1.1/-/10	50	3P	Dyn11	4	Sol. 1	600	Sol. 1	Ak Ao-10%	1250	130	41	No	1500x1200x750	≤ 1250	Heavy	C4M or C3H	No	No
GST001/1163	Romania	110134	2000	ONAN	20	±2x2.5%	0,42	24/125/50	1.1/-/10	50	3P	Dyn11	6	Sol. 1	600	Sol. 1	Ak Ao-10%	15000	1305	60	Yes	2200x2220x1450	no specific limits	Heavy	C4M or C3H	No	No
GST001/1163N	Romania	110135	2000	KNAN	20	±2x2.5%	0,42	24/125/50	1.1/-/10	50	3P	Dyn11	6	Sol. 1	600	Sol. 1	Ak Ao-10%	15000	1305	60	Yes	2200x2220x1450	no specific limits	Heavy	C4M or C3H	No	No
GST001/1164	Romania	110136	2500	ONAN	20	±2x2.5%	0,42	24/125/50	1.1/-/10	50	3P	Dyn11	6	Sol. 1	600	Sol. 1	Ak Ao-10%	18500	1575	63	Yes	2250x1800x2250	no specific limits	Heavy	C4M or C3H	No	No
GST001/1164N	Romania	110137	2500	KNAN	20	±2x2.5%	0,42	24/125/50	1.1/-/10	50	3P	Dyn11	6	Sol. 1	600	Sol. 1	Ak Ao-10%	18500	1575	63	Yes	2250x1800x2250	no specific limits	Heavy	C4M or C3H	No	No

GST001/1165	Romania	110138	25	ONAN	20	±2x2.5%	1	24/125/50	1.1/-/10	50	3P	Dyn11	4	Sol. 1	600	Sol. 1	Ak Ao-10%	600	63	37	No	1350x1120x710	≤ 1250	Heavy	C4M or C3H	No	No
GST001/1165N	Romania	110139	25	KNAN	20	±2x2.5%	1	24/125/50	1.1/-/10	50	3P	Dyn11	4	Sol. 1	600	Sol. 1	Ak Ao-10%	600	63	37	No	1350x1120x710	≤ 1250	Heavy	C4M or C3H	No	No
GST001/1166	Romania	110140	800	ONAN	6	±2x2.5%	0,42	7,2/60/20	1.1/-/10	50	3P	Dyn11	6	Sol. 4	N/A	Sol. 1	Ak Ao-10%	6000	585	53	Yes	1950x1850x1000	no specific limits	Heavy	C4M or C3H	No	No
GST001/1166N	Romania	110141	800	KNAN	6	±2x2.5%	0,42	7,2/60/20	1.1/-/10	50	3P	Dyn11	6	Sol. 4	N/A	Sol. 1	Ak Ao-10%	6000	585	53	Yes	1950x1850x1000	no specific limits	Heavy	C4M or C3H	No	No
GST001/1201	Spain	111183	50	ONAN	13,2	±2x2.5% +10%	0,420	24/125/50	1.1/20/10	50	3P	Dyn11	4	Sol. 1	600	Sol. 1	Ak Ao-10%	750	81	39	No	1520x1100x740	790	Heavy	C4M or C3H	Yes	Yes
GST001/1202	Spain	111178	50	ONAN	15,4	±2x2.5%	0,420	24/125/50	1.1/20/10	50	3P	Dyn11	4	Sol. 1	600	Sol. 1	Ak Ao-10%	750	81	39	No	1520x1100x740	790	Heavy	C4M or C3H	Yes	Yes
GST001/1203	Spain	111157	50	ONAN	16	±2x2.5% +10%	0,420	24/125/50	1.1/20/10	50	3P	Dyn11	4	Sol. 1	600	Sol. 1	Ak Ao-10%	750	81	39	No	1520x1100x740	790	Heavy	C4M or C3H	Yes	Yes
GST001/1204	Spain	111146	50	ONAN	20	±2x2.5% +10%	0,420	24/125/50	1.1/20/10	50	3P	Dyn11	4	Sol. 1	600	Sol. 1	Ak Ao-10%	750	81	39	No	1520x1100x740	790	Heavy	C4M or C3H	Yes	Yes
GST001/1204N	Spain	111208	50	KNAN	20	±2x2.5% +10%	0,420	24/125/50	1.1/20/10	50	3P	Dyn11	4	Sol. 1	600	Sol. 1	Ak Ao-10%	750	81	39	No	1520x1100x740	790	Heavy	C4M or C3H	Yes	Yes
GST001/1205	Spain	111150	50	ONAN	20	±2x2.5% +10%	0,420	24/125/50	1.1/20/10	50	3P	Dyn11	4	Sol. 5	N/A	Sol. 1	Ak Ao-10%	750	81	39	Yes	1350x1100x740	790	Very Heavy	C5M or C4H	Yes	No
GST001/1206	Spain	111142	50	ONAN	20	±2x2.5% +10%	0,242-0,420	24/125/50	1.1/20/10	50	3P	Dyn11	4 (0,420kV) 4 (0,242kV)	Sol. 5	N/A	Sol. 1	Ak Ao-10%	750	81	39	Yes	1350x1100x740	790	Very Heavy	C5M or C4H	Yes	No
GST001/1207	Spain	111116	50	ONAN	25	±2x2.5% +10%	0,420	36/170/70	1.1/20/10	50	3P	Dyn11	4,5	Sol. 3	900	Sol. 1	Ak+10% A0-10%+15%	825	93	43	No	1650x1100x780	950	Heavy	C4M or C3H	Yes	Yes
GST001/1207N	Spain	111198	50	KNAN	25	±2x2.5% +10%	0,420	36/170/70	1.1/20/10	50	3P	Dyn11	4,5	Sol. 3	900	Sol. 1	Ak+10% A0-10%+15%	825	93	43	No	1650x1100x780	950	Heavy	C4M or C3H	Yes	Yes
GST001/1208	Spain	111111	50	ONAN	25	±2x2.5% +10%	0,242-0,420	36/170/70	1.1/20/10	50	3P	Dyn11	4,5 (0,420kV) 4,5 (0,242kV)	Sol. 3	900	Sol. 1	Ak+10% A0-10%+15%	825	93	43	No	1650x1100x780	950	Heavy	C4M or C3H	Yes	Yes
GST001/1209	Spain	111094	50	ONAN	15,4-20	±2x2.5% +10%	0,420	24/125/50	1.1/20/10	50	3P	Dyn11	4	Sol. 1	600	Sol. 1	Ak+10% A0-10%+15%	825	93	39	No	1520x1100x740	790	Heavy	C4M or C3H	Yes	Yes
GST001/1209N	Spain	111218	50	KNAN	15,4-20	±2x2.5% +10%	0,420	24/125/50	1.1/20/10	50	3P	Dyn11	4	Sol. 1	600	Sol. 1	Ak+10% A0-10%+15%	825	93	39	No	1520x1100x740	790	Heavy	C4M or C3H	Yes	Yes
GST001/1210	Spain	111065	50	ONAN	9,5-16,455	-2x5% +3x5%	0,420	24/125/50	1.1/20/10	50	3P	Yzn11 - Dzn0	4	Sol. 1	600	Sol. 1	Ak+10% A0-10%+15%	825	93	39	No	1520x1100x740	790	Heavy	C4M or C3H	Yes	Yes
GST001/1211	Spain	111177	100	ONAN	15,4	±2x2.5%	0,420	24/125/50	1.1/20/10	50	3P	Dyn11	4	Sol. 1	600	Sol. 1	Ak Ao-10%	1250	130	41	No	1520x1100x740	790	Heavy	C4M or C3H	Yes	Yes
GST001/1211N	Spain	111209	100	KNAN	15,4	±2x2.5%	0,420	24/125/50	1.1/20/10	50	3P	Dyn11	4	Sol. 1	600	Sol. 1	Ak Ao-10%	1250	130	41	No	1520x1100x740	790	Heavy	C4M or C3H	Yes	Yes
GST001/1212	Spain	111156	100	ONAN	16	±2x2.5%	0,420	24/125/50	1.1/20/10	50	3P	Dyn11	4	Sol. 1	600	Sol. 1	Ak Ao-10%	1250	130	41	No	1520x1100x740	790	Heavy	C4M or C3H	Yes	Yes
GST001/1213	Spain	111153	100	ONAN	20	±2x2.5% +10%	0,420	24/125/50	1.1/20/10	50	3P	Dyn11	4	Sol. 1	600	Sol. 1	Ak Ao-10%	1250	130	41	No	1520x1100x740	790	Heavy	C4M or C3H	Yes	Yes
GST001/1213N	Spain	111207	100	KNAN	20	±2x2.5% +10%	0,420	24/125/50	1.1/20/10	50	3P	Dyn11	4	Sol. 1	600	Sol. 1	Ak Ao-10%	1250	130	41	No	1520x1100x740	790	Heavy	C4M or C3H	Yes	Yes

GST001/1214	Spain	111141	100	ONAN	20	±2x2.5% +10%	0,420	24/125/50	1.1/20/10	50	3P	Dyn11	4	Sol. 5	N/A	Sol. 1	Ak Ao-10%	1250	130	41	Yes	1350x1100x740	790	Very Heavy	C5M or C4H	Yes	No
GST001/1215	Spain	111145	100	ONAN	20	±2x2.5% +10%	0,242-0,420	24/125/50	1.1/20/10	50	3P	Dyn11	4 (0,420kV) 4 (0,242kV)	Sol. 5	N/A	Sol. 1	Ak Ao-10%	1250	130	41	Yes	1350x1100x740	790	Very Heavy	C5M or C4H	Yes	No
GST001/1216	Spain	111144	100	ONAN	20	±2x2.5% +10%	0,242-0,420	24/125/50	1.1/20/10	50	3P	Dyn11	4 (0,420kV) 4 (0,242kV)	Sol. 1	600	Sol. 1	Ak Ao-10%	1250	130	41	No	1520x1100x740	790	Heavy	C4M or C3H	Yes	Yes
GST001/1217	Spain	111113	100	ONAN	25	±2x2.5% +10%	0,420	36/170/70	1.1/20/10	50	3P	Dyn11	4,5	Sol. 3	900	Sol. 1	Ak+10% A0-10%+15%	1375	150	45	No	1650x1100x780	950	Heavy	C4M or C3H	Yes	Yes
GST001/1217N	Spain	111197	100	KNAN	25	±2x2.5% +10%	0,420	36/170/70	1.1/20/10	50	3P	Dyn11	4,5	Sol. 3	900	Sol. 1	Ak+10% A0-10%+15%	1375	150	45	No	1650x1100x780	950	Heavy	C4M or C3H	Yes	Yes
GST001/1218	Spain	111112	100	ONAN	25	±2x2.5% +10%	0,242-0,420	36/170/70	1.1/20/10	50	3P	Dyn11	4,5 (0,420kV) 4,5 (0,242kV)	Sol. 3	900	Sol. 1	Ak+10% A0-10%+15%	1375	150	45	No	1650x1100x780	950	Heavy	C4M or C3H	Yes	Yes
GST001/1219	Spain	111092	100	ONAN	15,4-20	±2x2.5% +10%	0,420	24/125/50	1.1/20/10	50	3P	Dyn11	4	Sol. 1	600	Sol. 1	Ak+10% A0-10%+15%	1375	150	41	No	1520x1100x740	790	Heavy	C4M or C3H	Yes	Yes
GST001/1219N	Spain	111211	100	KNAN	15,4-20	±2x2.5% +10%	0,420	24/125/50	1.1/20/10	50	3P	Dyn11	4	Sol. 1	600	Sol. 1	Ak+10% A0-10%+15%	1375	150	41	No	1520x1100x740	790	Heavy	C4M or C3H	Yes	Yes
GST001/1220	Spain	111058	100	ONAN	9,5-16,455	-2x5% +3x5%	0,420	24/125/50	1.1/20/10	50	3P	Yzn11 - Dzn0	4	Sol. 1	600	Sol. 1	Ak+10% A0-10%+15%	1375	150	41	No	1520x1100x740	790	Heavy	C4M or C3H	Yes	Yes
GST001/1221	Spain	111056	100	ONAN	9,5-16,455	-2x5% +3x5%	0,242-0,420	24/125/50	1.1/20/10	50	3P	Yyn0-Dyn11	4 (0,420kV) 4 (0,242kV)	Sol. 1	600	Sol. 1	Ak+10% A0-10%+15%	1375	150	41	No	1520x1100x740	790	Heavy	C4M or C3H	Yes	Yes
GST001/1222	Spain	111189	160	ONAN	13,2	±2x2.5% +10%	0,242-0,420	24/125/50	1.1/20/10	50	3P	Dyn11	4 (0,420kV) 4 (0,242kV)	Sol. 1	600	Sol. 1 - Sol.2	Ak Ao-10%	1750	189	44	Yes	1570x1200x830	1050	Heavy	C4M or C3H	Yes	Yes
GST001/1223	Spain	111170	160	ONAN	15,4	±2x2.5%	0,420	24/125/50	1.1/20/10	50	3P	Dyn11	4	Sol. 1	600	Sol. 1	Ak Ao-10%	1750	189	44	Yes	1570x1200x830	1050	Heavy	C4M or C3H	Yes	Yes
GST001/1224	Spain	111181	160	ONAN	15,4	±2x2.5%	0,242-0,420	24/125/50	1.1/20/10	50	3P	Dyn11	4 (0,420kV) 4 (0,242kV)	Sol. 1	600	Sol. 1 - Sol.2	Ak Ao-10%	1750	189	44	Yes	1570x1200x830	1050	Heavy	C4M or C3H	Yes	Yes
GST001/1225	Spain	111152	160	ONAN	16	±2x2.5% +10%	0,420	24/125/50	1.1/20/10	50	3P	Dyn11	4	Sol. 1	600	Sol. 1	Ak Ao-10%	1750	189	44	Yes	1570x1200x830	1050	Heavy	C4M or C3H	Yes	Yes
GST001/1226	Spain	111160	160	ONAN	16	±2x2.5% +10%	0,242-0,420	24/125/50	1.1/20/10	50	3P	Dyn11	4 (0,420kV) 4	Sol. 1	600	Sol. 1 - Sol.2	Ak Ao-10%	1750	189	44	Yes	1570x1200x830	1050	Heavy	C4M or C3H	Yes	Yes

													(0,242kV)														
GST001/1227	Spain	111137	160	ONAN	20	±2x2.5% +10%	0,420	24/125/50	1.1/20/10	50	3P	Dyn11	4	Sol. 1	600	Sol. 1	Ak Ao-10%	1750	189	44	Yes	1570x1200x830	1050	Heavy	C4M or C3H	Yes	Yes
GST001/1227N	Spain	111205	160	KNAN	20	±2x2.5% +10%	0,420	24/125/50	1.1/20/10	50	3P	Dyn11	4	Sol. 1	600	Sol. 1	Ak Ao-10%	1750	189	44	Yes	1570x1200x830	1050	Heavy	C4M or C3H	Yes	Yes
GST001/1228	Spain	111143	160	ONAN	20	±2x2.5% +10%	0,242-0,420	24/125/50	1.1/20/10	50	3P	Dyn11	4 (0,420kV) 4 (0,242kV)	Sol. 1	600	Sol. 1 - Sol.2	Ak Ao-10%	1750	189	44	Yes	1570x1200x830	1050	Heavy	C4M or C3H	Yes	Yes
GST001/1228N	Spain	111204	160	KNAN	20	±2x2.5% +10%	0,242-0,420	24/125/50	1.1/20/10	50	3P	Dyn11	4 (0,420kV) 4 (0,242kV)	Sol. 1	600	Sol. 1 - Sol.2	Ak Ao-10%	1750	189	44	Yes	1570x1200x830	1050	Heavy	C4M or C3H	Yes	Yes
GST001/1229	Spain	111140	160	ONAN	20	±2x2.5% +10%	0,420	24/125/50	1.1/20/10	50	3P	Dyn11	4	Sol. 5	N/A	Sol. 1	Ak Ao-10%	1750	189	44	Yes	1350x1200x830	1050	Very Heavy	C5M or C4H	Yes	No
GST001/1229N	Spain	111206	160	KNAN	20	±2x2.5% +10%	0,420	24/125/50	1.1/20/10	50	3P	Dyn11	4	Sol. 5	N/A	Sol. 1	Ak Ao-10%	1750	189	44	Yes	1350x1200x830	1050	Very Heavy	C5M or C4H	Yes	No
GST001/1230	Spain	111138	160	ONAN	20	±2x2.5% +10%	0,242-0,420	24/125/50	1.1/20/10	50	3P	Dyn11	4 (0,420kV) 4 (0,242kV)	Sol. 5	N/A	Sol. 1 - Sol.2	Ak Ao-10%	1750	189	44	Yes	1350x1200x830	1050	Very Heavy	C5M or C4H	Yes	No
GST001/1231	Spain	111109	160	ONAN	25	±2x2.5% +10%	0,420	36/170/70	1.1/20/10	50	3P	Dyn11	4,5	Sol. 3	900	Sol. 1	Ak+10% A0-10%+15%	1925	217	48	Yes	1770x1300x850	1200	Heavy	C4M or C3H	Yes	Yes
GST001/1231N	Spain	111196	160	KNAN	25	±2x2.5% +10%	0,420	36/170/70	1.1/20/10	50	3P	Dyn11	4,5	Sol. 3	900	Sol. 1	Ak+10% A0-10%+15%	1925	217	48	Yes	1770x1300x850	1200	Heavy	C4M or C3H	Yes	Yes
GST001/1232	Spain	111108	160	ONAN	25	±2x2.5% +10%	0,242-0,420	36/170/70	1.1/20/10	50	3P	Dyn11	4,5 (0,420kV) 4,5 (0,242kV)	Sol. 3	900	Sol. 1 - Sol.2	Ak+10% A0-10%+15%	1925	217	48	Yes	1770x1300x850	1200	Heavy	C4M or C3H	Yes	Yes
GST001/1232N	Spain	111199	160	KNAN	25	±2x2.5% +10%	0,242-0,420	36/170/70	1.1/20/10	50	3P	Dyn11	4,5 (0,420kV) 4,5 (0,242kV)	Sol. 3	900	Sol. 1 - Sol.2	Ak+10% A0-10%+15%	1925	217	48	Yes	1770x1300x850	1200	Heavy	C4M or C3H	Yes	Yes
GST001/1233	Spain	111079	160	ONAN	15,4-20	±2x2.5% +10%	0,420	24/125/50	1.1/20/10	50	3P	Dyn11	4	Sol. 1	600	Sol. 1	Ak+10% A0-10%+15%	1925	217	44	Yes	1570x1200x830	1050	Heavy	C4M or C3H	Yes	Yes
GST001/1233N	Spain	111210	160	KNAN	15,4-20	±2x2.5% +10%	0,420	24/125/50	1.1/20/10	50	3P	Dyn11	4	Sol. 1	600	Sol. 1	Ak+10% A0-10%+15%	1925	217	44	Yes	1570x1200x830	1050	Heavy	C4M or C3H	Yes	Yes
GST001/1234	Spain	111078	160	ONAN	15,4-20	±2x2.5% +10%	0,242-0,420	24/125/50	1.1/20/10	50	3P	Dyn11	4 (0,420kV) 4 (0,242kV)	Sol. 1	600	Sol. 1 - Sol.2	Ak+10% A0-10%+15%	1925	217	44	Yes	1570x1200x830	1050	Heavy	C4M or C3H	Yes	Yes
GST001/1234N	Spain	111217	160	KNAN	15,4-20	±2x2.5% +10%	0,242-0,420	24/125/50	1.1/20/10	50	3P	Dyn11	4 (0,420kV)	Sol. 1	600	Sol. 1 - Sol.2	Ak+10% A0-10%+15%	1925	217	44	Yes	1570x1200x830	1050	Heavy	C4M or C3H	Yes	Yes

													4 (0,242kV)														
GST001/1235	Spain	111055	160	ONAN	9,5-16,455	-2x5% +3x5%	0,420	24/125/50	1.1/20/10	50	3P	Yyn0-Dyn11	4	Sol. 1	600	Sol. 1	Ak+10% A0-10%+15%	1925	217	44	Yes	1570x1200x830	1050	Heavy	C4M or C3H	Yes	Yes
GST001/1236	Spain	111051	160	ONAN	9,5-16,455	-2x5% +3x5%	0,242-0,420	24/125/50	1.1/20/10	50	3P	Yyn0-Dyn11	4 (0,420kV) 4 (0,242kV)	Sol. 1	600	Sol. 1 - Sol.2	Ak+10% A0-10%+15%	1925	217	44	Yes	1570x1200x830	1050	Heavy	C4M or C3H	Yes	Yes
GST001/1237	Spain	111194	250	ONAN	11	±2x2.5% +10%	0,420	12/75/28	1.1/20/10	50	3P	Dyn11	4	Sol. 5	N/A	Sol. 6	Ak Ao-10%	2350	270	47	Yes	1350x1300x910	1400	Heavy	C4M or C3H	No	No
GST001/1238	Spain	111193	250	ONAN	11	±2x2.5% +10%	0,242-0,420	12/75/28	1.1/20/10	50	3P	Dyn11	4 (0,420kV) 4 (0,242kV)	Sol. 5	N/A	Sol. 2	Ak Ao-10%	2350	270	47	Yes	1350x1300x910	1400	Heavy	C4M or C3H	No	No
GST001/1239	Spain	111192	250	ONAN	13,2	±2x2.5% +10%	0,420	24/125/50	1.1/20/10	50	3P	Dyn11	4	Sol. 5	N/A	Sol. 6	Ak Ao-10%	2350	270	47	Yes	1350x1300x910	1400	Heavy	C4M or C3H	No	No
GST001/1240	Spain	111182	250	ONAN	13,2	±2x2.5% +10%	0,242-0,420	24/125/50	1.1/20/10	50	3P	Dyn11	4 (0,420kV) 4 (0,242kV)	Sol. 5	N/A	Sol. 2	Ak Ao-10%	2350	270	47	Yes	1350x1300x910	1400	Heavy	C4M or C3H	No	No
GST001/1241	Spain	111169	250	ONAN	15,4	±2x2.5%	0,420	24/125/50	1.1/20/10	50	3P	Dyn11	4	Sol. 5	N/A	Sol. 6	Ak Ao-10%	2350	270	47	Yes	1350x1300x910	1400	Heavy	C4M or C3H	No	No
GST001/1242	Spain	111171	250	ONAN	15,4	±2x2.5%	0,242-0,420	24/125/50	1.1/20/10	50	3P	Dyn11	4 (0,420kV) 4 (0,242kV)	Sol. 5	N/A	Sol. 2	Ak Ao-10%	2350	270	47	Yes	1350x1300x910	1400	Heavy	C4M or C3H	No	No
GST001/1243	Spain	111151	250	ONAN	16	±2x2.5% +10%	0,420	24/125/50	1.1/20/10	50	3P	Dyn11	4	Sol. 5	N/A	Sol. 6	Ak Ao-10%	2350	270	47	Yes	1350x1300x910	1400	Heavy	C4M or C3H	No	No
GST001/1244	Spain	111155	250	ONAN	16	±2x2.5% +10%	0,242-0,420	24/125/50	1.1/20/10	50	3P	Dyn11	4 (0,420kV) 4 (0,242kV)	Sol. 5	N/A	Sol. 2	Ak Ao-10%	2350	270	47	Yes	1350x1300x910	1400	Heavy	C4M or C3H	No	No
GST001/1245	Spain	111135	250	ONAN	20	±2x2.5% +10%	0,420	24/125/50	1.1/20/10	50	3P	Dyn11	4	Sol. 5	N/A	Sol. 6	Ak Ao-10%	2350	270	47	Yes	1350x1300x910	1400	Heavy	C4M or C3H	No	No
GST001/1245N	Spain	111203	250	KNAN	20	±2x2.5% +10%	0,420	24/125/50	1.1/20/10	50	3P	Dyn11	4	Sol. 5	N/A	Sol. 6	Ak Ao-10%	2350	270	47	Yes	1350x1300x910	1400	Heavy	C4M or C3H	No	No
GST001/1246	Spain	111136	250	ONAN	20	±2x2.5% +10%	0,242-0,420	24/125/50	1.1/20/10	50	3P	Dyn11	4 (0,420kV) 4 (0,242kV)	Sol. 5	N/A	Sol. 2	Ak Ao-10%	2350	270	47	Yes	1350x1300x910	1400	Heavy	C4M or C3H	No	No
GST001/1247	Spain	111134	250	ONAN	20	±2x2.5% +10%	0,420	24/125/50	1.1/20/10	50	3P	Dyn11	4	Sol. 5	N/A	Sol. 6	Ak Ao-10%	2350	270	47	Yes	1350x1300x910	1400	Very Heavy	C5M or C4H	No	No
GST001/1247N	Spain	111202	250	KNAN	20	±2x2.5% +10%	0,420	24/125/50	1.1/20/10	50	3P	Dyn11	4	Sol. 5	N/A	Sol. 6	Ak Ao-10%	2350	270	47	Yes	1350x1300x910	1400	Very Heavy	C5M or C4H	No	No

GST001/1248	Spain	111139	250	ONAN	20	±2x2.5% +10%	0,242-0,420	24/125/50	1.1/20/10	50	3P	Dyn11	4 (0,420kV) 4 (0,242kV)	Sol. 5	N/A	Sol. 2	Ak Ao-10%	2350	270	47	Yes	1350x1300x910	1400	Very Heavy	C5M or C4H	No	No
GST001/1249	Spain	111107	250	ONAN	25	±2x2.5% +10%	0,420	36/170/70	1.1/20/10	50	3P	Dyn11	4,5	Sol. 5	N/A	Sol. 6	Ak+10% A0-10%+15%	2585	311	51	Yes	1350x1350x980	1600	Heavy	C4M or C3H	No	No
GST001/1249N	Spain	111215	250	KNAN	25	±2x2.5% +10%	0,420	36/170/70	1.1/20/10	50	3P	Dyn11	4,5	Sol. 5	N/A	Sol. 6	Ak+10% A0-10%+15%	2585	311	51	Yes	1350x1350x980	1600	Heavy	C4M or C3H	No	No
GST001/1250	Spain	111105	250	ONAN	25	±2x2.5% +10%	0,242-0,420	36/170/70	1.1/20/10	50	3P	Dyn11	4,5 (0,420kV) 4,5 (0,242kV)	Sol. 5	N/A	Sol. 2	Ak+10% A0-10%+15%	2585	311	51	Yes	1350x1350x980	1600	Heavy	C4M or C3H	No	No
GST001/1251	Spain	111076	250	ONAN	15,4-20	±2x2.5% +10%	0,420	24/125/50	1.1/20/10	50	3P	Dyn11	4	Sol. 5	N/A	Sol. 6	Ak+10% A0-10%+15%	2585	311	47	Yes	1350x1300x910	1400	Heavy	C4M or C3H	No	No
GST001/1252	Spain	111075	250	ONAN	15,4-20	±2x2.5% +10%	0,242-0,420	24/125/50	1.1/20/10	50	3P	Dyn11	4 (0,420kV) 4 (0,242kV)	Sol. 5	N/A	Sol. 2	Ak+10% A0-10%+15%	2585	311	47	Yes	1350x1300x910	1400	Heavy	C4M or C3H	No	No
GST001/1253	Spain	111066	250	ONAN	9,5-16,455	-2x5% +3x5%	0,420	24/125/50	1.1/20/10	50	3P	Yyn0-Dyn11	4	Sol. 5	N/A	Sol. 6	Ak+10% A0-10%+15%	2585	311	47	Yes	1350x1300x910	1400	Heavy	C4M or C3H	No	No
GST001/1254	Spain	111053	250	ONAN	9,5-16,455	-2x5% +3x5%	0,242-0,420	24/125/50	1.1/20/10	50	3P	Yyn0-Dyn11	4 (0,420kV) 4 (0,242kV)	Sol. 5	N/A	Sol. 2	Ak+10% A0-10%+15%	2585	311	47	Yes	1350x1300x910	1400	Heavy	C4M or C3H	No	No
GST001/1255	Spain	111190	400	ONAN	11	±2x2.5% +10%	0,420	12/75/28	1.1/20/10	50	3P	Dyn11	4	Sol. 5	N/A	Sol. 6	Ak Ao-10%	3250	387	50	Yes	1750x1620x1020	1950	Heavy	C4M or C3H	No	No
GST001/1256	Spain	111188	400	ONAN	11	±2x2.5% +10%	0,242-0,420	12/75/28	1.1/20/10	50	3P	Dyn11	4 (0,420kV) 4 (0,242kV)	Sol. 5	N/A	Sol.2 - Sol.3	Ak Ao-10%	3250	387	50	Yes	1750x1620x1020	1950	Heavy	C4M or C3H	No	No
GST001/1257	Spain	111180	400	ONAN	13,2	±2x2.5% +10%	0,420	24/125/50	1.1/20/10	50	3P	Dyn11	4	Sol. 5	N/A	Sol. 6	Ak Ao-10%	3250	387	50	Yes	1750x1620x1020	1950	Heavy	C4M or C3H	No	No
GST001/1258	Spain	111179	400	ONAN	13,2	±2x2.5% +10%	0,242-0,420	24/125/50	1.1/20/10	50	3P	Dyn11	4 (0,420kV) 4 (0,242kV)	Sol. 5	N/A	Sol.2 - Sol.3	Ak Ao-10%	3250	387	50	Yes	1750x1620x1020	1950	Heavy	C4M or C3H	No	No
GST001/1259	Spain	111166	400	ONAN	15,4	±2x2.5%	0,420	24/125/50	1.1/20/10	50	3P	Dyn11	4	Sol. 5	N/A	Sol. 6	Ak Ao-10%	3250	387	50	Yes	1750x1620x1020	1950	Heavy	C4M or C3H	No	No
GST001/1260	Spain	111164	400	ONAN	15,4	±2x2.5%	0,242-0,420	24/125/50	1.1/20/10	50	3P	Dyn11	4 (0,420kV) 4 (0,242kV)	Sol. 5	N/A	Sol.2 - Sol.3	Ak Ao-10%	3250	387	50	Yes	1750x1620x1020	1950	Heavy	C4M or C3H	No	No
GST001/1261	Spain	111154	400	ONAN	16	±2x2.5% +10%	0,420	24/125/50	1.1/20/10	50	3P	Dyn11	4	Sol. 5	N/A	Sol. 6	Ak Ao-10%	3250	387	50	Yes	1750x1620x1020	1950	Heavy	C4M or C3H	No	No

GST001/1262	Spain	111148	400	ONAN	16	±2x2.5% +10%	0,242-0,420	24/125/50	1.1/20/10	50	3P	Dyn11	4 (0,420kV) 4 (0,242kV)	Sol. 5	N/A	Sol.2 - Sol.3	Ak Ao-10%	3250	387	50	Yes	1750x1620x1020	1950	Heavy	C4M or C3H	No	No
GST001/1263	Spain	111133	400	ONAN	20	±2x2.5% +10%	0,420	24/125/50	1.1/20/10	50	3P	Dyn11	4	Sol. 5	N/A	Sol. 6	Ak Ao-10%	3250	387	50	Yes	1750x1620x1020	1950	Heavy	C4M or C3H	No	No
GST001/1263N	Spain	111214	400	KNAN	20	±2x2.5% +10%	0,420	24/125/50	1.1/20/10	50	3P	Dyn11	4	Sol. 5	N/A	Sol. 6	Ak Ao-10%	3250	387	50	Yes	1750x1620x1020	1950	Heavy	C4M or C3H	No	No
GST001/1264	Spain	111132	400	ONAN	20	±2x2.5% +10%	0,242-0,420	24/125/50	1.1/20/10	50	3P	Dyn11	4 (0,420kV) 4 (0,242kV)	Sol. 5	N/A	Sol.2 - Sol.3	Ak Ao-10%	3250	387	50	Yes	1750x1620x1020	1950	Heavy	C4M or C3H	No	No
GST001/1265	Spain	111131	400	ONAN	20	±2x2.5% +10%	0,420	24/125/50	1.1/20/10	50	3P	Dyn11	4	Sol. 5	N/A	Sol. 6	Ak Ao-10%	3250	387	50	Yes	1750x1620x1020	1950	Very Heavy	C5M or C4H	No	No
GST001/1265N	Spain	111200	400	KNAN	20	±2x2.5% +10%	0,420	24/125/50	1.1/20/10	50	3P	Dyn11	4	Sol. 5	N/A	Sol. 6	Ak Ao-10%	3250	387	50	Yes	1750x1620x1020	1950	Very Heavy	C5M or C4H	No	No
GST001/1266	Spain	111129	400	ONAN	20	±2x2.5% +10%	0,242-0,420	24/125/50	1.1/20/10	50	3P	Dyn11	4 (0,420kV) 4 (0,242kV)	Sol. 5	N/A	Sol.2 - Sol.3	Ak Ao-10%	3250	387	50	Yes	1750x1620x1020	1950	Very Heavy	C5M or C4H	No	No
GST001/1267	Spain	111104	400	ONAN	25	±2x2.5% +10%	0,420	36/170/70	1.1/20/10	50	3P	Dyn11	4,5	Sol. 5	N/A	Sol. 6	Ak+10% A0-10%+15%	3575	445	54	Yes	1900x1670x1050	2200	Heavy	C4M or C3H	No	No
GST001/1267N	Spain	111106	400	KNAN	25	±2x2.5% +10%	0,420	36/170/70	1.1/20/10	50	3P	Dyn11	4,5	Sol. 5	N/A	Sol. 6	Ak+10% A0-10%+15%	3575	445	54	Yes	1900x1670x1050	2200	Heavy	C4M or C3H	No	No
GST001/1268	Spain	111103	400	ONAN	25	±2x2.5% +10%	0,242-0,420	36/170/70	1.1/20/10	50	3P	Dyn11	4,5 (0,420kV) 4,5 (0,242kV)	Sol. 5	N/A	Sol.2 - Sol.3	Ak+10% A0-10%+15%	3575	445	54	Yes	1900x1670x1050	2200	Heavy	C4M or C3H	No	No
GST001/1268N	Spain	111216	400	KNAN	25	±2x2.5% +10%	0,242-0,420	36/170/70	1.1/20/10	50	3P	Dyn11	4,5 (0,420kV) 4,5 (0,242kV)	Sol. 5	N/A	Sol.2 - Sol.3	Ak+10% A0-10%+15%	3575	445	54	Yes	1900x1670x1050	2200	Heavy	C4M or C3H	No	No
GST001/1269	Spain	111074	400	ONAN	15,4-20	±2x2.5% +10%	0,420	24/125/50	1.1/20/10	50	3P	Dyn11	4	Sol. 5	N/A	Sol. 6	Ak+10% A0-10%+15%	3575	445	50	Yes	1750x1620x1020	1950	Heavy	C4M or C3H	No	No
GST001/1269N	Spain	111212	400	KNAN	15,4-20	±2x2.5% +10%	0,420	24/125/50	1.1/20/10	50	3P	Dyn11	4	Sol. 5	N/A	Sol. 6	Ak+10% A0-10%+15%	3575	445	50	Yes	1750x1620x1020	1950	Heavy	C4M or C3H	No	No
GST001/1270	Spain	111073	400	ONAN	15,4-20	±2x2.5% +10%	0,242-0,420	24/125/50	1.1/20/10	50	3P	Dyn11	4 (0,420kV) 4 (0,242kV)	Sol. 5	N/A	Sol.2 - Sol.3	Ak+10% A0-10%+15%	3575	445	50	Yes	1750x1620x1020	1950	Heavy	C4M or C3H	No	No
GST001/1271	Spain	111048	400	ONAN	9,5-16,455	-2x5% +3x5%	0,420	24/125/50	1.1/20/10	50	3P	Yyn0-Dyn11	4	Sol. 5	N/A	Sol. 6	Ak+10% A0-10%+15%	3575	445	50	Yes	1750x1620x1020	1950	Heavy	C4M or C3H	No	No
GST001/1272	Spain	111049	400	ONAN	9,5-16,455	-2x5% +3x5%	0,242-0,420	24/125/50	1.1/20/10	50	3P	Yyn0-Dyn11	4 (0,420kV)	Sol. 5	N/A	Sol.2 - Sol.3	Ak+10% A0-10%+15%	3575	445	50	Yes	1750x1620x1020	1950	Heavy	C4M or C3H	No	No

													4 (0,242kV)														
GST001/1273	Spain	111187	630	ONAN	11	±2x2.5% +10%	0,420	12/75/28	1.1/20/10	50	3P	Dyn11	4	Sol. 5	N/A	Sol. 6	Ak Ao-10%	4600	540	52	Yes	1870x1790x1140	2600	Heavy	C4M or C3H	No	No
GST001/1274	Spain	111186	630	ONAN	11	±2x2.5% +10%	0,242-0,420	12/75/28	1.1/20/10	50	3P	Dyn11	4 (0,420kV) 4 (0,242kV)	Sol. 5	N/A	Sol.3 - Sol.4	Ak Ao-10%	4600	540	52	Yes	1870x1790x1140	2600	Heavy	C4M or C3H	No	No
GST001/1275	Spain	111176	630	ONAN	13,2	±2x2.5% +10%	0,420	24/125/50	1.1/20/10	50	3P	Dyn11	4	Sol. 5	N/A	Sol. 6	Ak Ao-10%	4600	540	52	Yes	1870x1790x1140	2600	Heavy	C4M or C3H	No	No
GST001/1276	Spain	111175	630	ONAN	13,2	±2x2.5% +10%	0,242-0,420	24/125/50	1.1/20/10	50	3P	Dyn11	4 (0,420kV) 4 (0,242kV)	Sol. 5	N/A	Sol.3 - Sol.4	Ak Ao-10%	4600	540	52	Yes	1870x1790x1140	2600	Heavy	C4M or C3H	No	No
GST001/1277	Spain	111168	630	ONAN	15,4	±2x2.5%	0,420	24/125/50	1.1/20/10	50	3P	Dyn11	4	Sol. 5	N/A	Sol. 6	Ak Ao-10%	4600	540	52	Yes	1870x1790x1140	2600	Heavy	C4M or C3H	No	No
GST001/1278	Spain	111165	630	ONAN	15,4	±2x2.5%	0,242-0,420	24/125/50	1.1/20/10	50	3P	Dyn11	4 (0,420kV) 4 (0,242kV)	Sol. 5	N/A	Sol.3 - Sol.4	Ak Ao-10%	4600	540	52	Yes	1870x1790x1140	2600	Heavy	C4M or C3H	No	No
GST001/1279	Spain	111147	630	ONAN	16	±2x2.5% +10%	0,420	24/125/50	1.1/20/10	50	3P	Dyn11	4	Sol. 5	N/A	Sol. 6	Ak Ao-10%	4600	540	52	Yes	1870x1790x1140	2600	Heavy	C4M or C3H	No	No
GST001/1280	Spain	111149	630	ONAN	16	±2x2.5% +10%	0,242-0,420	24/125/50	1.1/20/10	50	3P	Dyn11	4 (0,420kV) 4 (0,242kV)	Sol. 5	N/A	Sol.3 - Sol.4	Ak Ao-10%	4600	540	52	Yes	1870x1790x1140	2600	Heavy	C4M or C3H	No	No
GST001/1281	Spain	111128	630	ONAN	20	±2x2.5% +10%	0,420	24/125/50	1.1/20/10	50	3P	Dyn11	4	Sol. 5	N/A	Sol. 6	Ak Ao-10%	4600	540	52	Yes	1870x1790x1140	2600	Heavy	C4M or C3H	No	No
GST001/1281N	Spain	111130	630	KNAN	20	±2x2.5% +10%	0,420	24/125/50	1.1/20/10	50	3P	Dyn11	4	Sol. 5	N/A	Sol. 6	Ak Ao-10%	4600	540	52	Yes	1870x1790x1140	2600	Heavy	C4M or C3H	No	No
GST001/1282	Spain	111125	630	ONAN	20	±2x2.5% +10%	0,242-0,420	24/125/50	1.1/20/10	50	3P	Dyn11	4 (0,420kV) 4 (0,242kV)	Sol. 5	N/A	Sol.3 - Sol.4	Ak Ao-10%	4600	540	52	Yes	1870x1790x1140	2600	Heavy	C4M or C3H	No	No
GST001/1283	Spain	111127	630	ONAN	20	±2x2.5% +10%	0,420	24/125/50	1.1/20/10	50	3P	Dyn11	4	Sol. 5	N/A	Sol. 6	Ak Ao-10%	4600	540	52	Yes	1870x1790x1140	2600	Very Heavy	C5M or C4H	No	No
GST001/1283N	Spain	111201	630	KNAN	20	±2x2.5% +10%	0,420	24/125/50	1.1/20/10	50	3P	Dyn11	4	Sol. 5	N/A	Sol. 6	Ak Ao-10%	4600	540	52	Yes	1870x1790x1140	2600	Very Heavy	C5M or C4H	No	No
GST001/1284	Spain	111126	630	ONAN	20	±2x2.5% +10%	0,242-0,420	24/125/50	1.1/20/10	50	3P	Dyn11	4 (0,420kV) 4 (0,242kV)	Sol. 5	N/A	Sol.3 - Sol.4	Ak Ao-10%	4600	540	52	Yes	1870x1790x1140	2600	Very Heavy	C5M or C4H	No	No
GST001/1285	Spain	111101	630	ONAN	25	±2x2.5% +10%	0,420	36/170/70	1.1/20/10	50	3P	Dyn11	4,5	Sol. 5	N/A	Sol. 6	Ak+10% A0-10%+15%	5060	621	56	Yes	2000x1850x1170	2900	Heavy	C4M or C3H	No	No

GST001/1285N	Spain	111102	630	KNAN	25	±2x2.5% +10%	0,420	36/170/70	1.1/20/10	50	3P	Dyn11	4,5	Sol. 5	N/A	Sol. 6	Ak+10% A0-10%+15%	5060	621	56	Yes	2000x1850x1170	2900	Heavy	C4M or C3H	No	No
GST001/1286	Spain	111097	630	ONAN	25	±2x2.5% +10%	0,242-0,420	36/170/70	1.1/20/10	50	3P	Dyn11	4,5 (0,420kV) 4,5 (0,242kV)	Sol. 5	N/A	Sol.3 - Sol.4	Ak+10% A0-10%+15%	5060	621	56	Yes	2000x1850x1170	2900	Heavy	C4M or C3H	No	No
GST001/1286N	Spain	111213	630	KNAN	25	±2x2.5% +10%	0,242-0,420	36/170/70	1.1/20/10	50	3P	Dyn11	4,5 (0,420kV) 4,5 (0,242kV)	Sol. 5	N/A	Sol.3 - Sol.4	Ak+10% A0-10%+15%	5060	621	56	Yes	2000x1850x1170	2900	Heavy	C4M or C3H	No	No
GST001/1287	Spain	111072	630	ONAN	15,4-20	±2x2.5% +10%	0,420	24/125/50	1.1/20/10	50	3P	Dyn11	4	Sol. 5	N/A	Sol. 6	Ak+10% A0-10%+15%	5060	621	52	Yes	1870x1790x1140	2600	Heavy	C4M or C3H	No	No
GST001/1287N	Spain	111110	630	KNAN	15,4-20	±2x2.5% +10%	0,420	24/125/50	1.1/20/10	50	3P	Dyn11	4	Sol. 5	N/A	Sol. 6	Ak+10% A0-10%+15%	5060	621	52	Yes	1870x1790x1140	2600	Heavy	C4M or C3H	No	No
GST001/1288	Spain	111070	630	ONAN	15,4-20	±2x2.5% +10%	0,242-0,420	24/125/50	1.1/20/10	50	3P	Dyn11	4 (0,420kV) 4 (0,242kV)	Sol. 5	N/A	Sol.3 - Sol.4	Ak+10% A0-10%+15%	5060	621	52	Yes	1870x1790x1140	2600	Heavy	C4M or C3H	No	No
GST001/1289	Spain	111052	630	ONAN	9,5-16,455	-2x5% +3x5%	0,420	24/125/50	1.1/20/10	50	3P	Yyn0-Dyn11	4	Sol. 5	N/A	Sol. 6	Ak+10% A0-10%+15%	5060	621	52	Yes	1870x1790x1140	2600	Heavy	C4M or C3H	No	No
GST001/1290	Spain	111042	630	ONAN	9,5-16,455	-2x5% +3x5%	0,242-0,420	24/125/50	1.1/20/10	50	3P	Yyn0-Dyn11	4 (0,420kV) 4 (0,242kV)	Sol. 5	N/A	Sol.3 - Sol.4	Ak+10% A0-10%+15%	5060	621	52	Yes	1870x1790x1140	2600	Heavy	C4M or C3H	No	No
GST001/1291	Spain	111195	1000	ONAN	11	±2x2.5% +10%	0,420	12/75/28	1.1/20/10	50	3P	Dyn11	6	Sol. 5	N/A	Sol. 6	Ak Ao-10%	7600	693	55	Yes	2080x1990x1190	3400	Heavy	C4M or C3H	No	No
GST001/1291N	Spain	111191	1000	KNAN	11	±2x2.5% +10%	0,420	12/75/28	1.1/20/10	50	3P	Dyn11	6	Sol. 5	N/A	Sol. 6	Ak Ao-10%	7600	693	55	Yes	2080x1990x1190	3400	Heavy	C4M or C3H	No	No
GST001/1292	Spain	111185	1000	ONAN	11	±2x2.5% +10%	0,242-0,420	12/75/28	1.1/20/10	50	3P	Dyn11	6 (0,420kV) 6 (0,242kV)	Sol. 5	N/A	Sol.4 - Sol.5	Ak+10% A0-10%+15%	8360	797	55	Yes	2080x1990x1190	3400	Heavy	C4M or C3H	No	No
GST001/1292N	Spain	111184	1000	KNAN	11	±2x2.5% +10%	0,242-0,420	12/75/28	1.1/20/10	50	3P	Dyn11	6 (0,420kV) 6 (0,242kV)	Sol. 5	N/A	Sol.4 - Sol.5	Ak+10% A0-10%+15%	8360	797	55	Yes	2080x1990x1190	3400	Heavy	C4M or C3H	No	No
GST001/1293	Spain	111159	1000	ONAN	15,4	±2x2.5%	0,420	24/125/50	1.1/20/10	50	3P	Dyn11	6	Sol. 5	N/A	Sol. 6	Ak Ao-10%	7600	693	55	Yes	2080x1990x1190	3400	Heavy	C4M or C3H	No	No
GST001/1293N	Spain	111161	1000	KNAN	15,4	±2x2.5%	0,420	24/125/50	1.1/20/10	50	3P	Dyn11	6	Sol. 5	N/A	Sol. 6	Ak Ao-10%	7600	693	55	Yes	2080x1990x1190	3400	Heavy	C4M or C3H	No	No
GST001/1294	Spain	111122	1000	ONAN	20	±2x2.5% +10%	0,420	24/125/50	1.1/20/10	50	3P	Dyn11	6	Sol. 5	N/A	Sol. 6	Ak Ao-10%	7600	693	55	Yes	2080x1990x1190	3400	Heavy	C4M or C3H	No	No
GST001/1294N	Spain	111124	1000	KNAN	20	±2x2.5% +10%	0,420	24/125/50	1.1/20/10	50	3P	Dyn11	6	Sol. 5	N/A	Sol. 6	Ak Ao-10%	7600	693	55	Yes	2080x1990x1190	3400	Heavy	C4M or C3H	No	No

GST001/1295	Spain	111114	1000	ONAN	20	±2x2.5% +10%	0,242-0,420	24/125/50	1.1/20/10	50	3P	Dyn11	6 (0,420kV) 6 (0,242kV)	Sol. 5	N/A	Sol.4 - Sol.5	Ak+10% A0-10%+15%	8360	797	55	Yes	2080x1990x1190	3400	Heavy	C4M or C3H	No	No
GST001/1295N	Spain	111120	1000	KNAN	20	±2x2.5% +10%	0,242-0,420	24/125/50	1.1/20/10	50	3P	Dyn11	6 (0,420kV) 6 (0,242kV)	Sol. 5	N/A	Sol.4 - Sol.5	Ak+10% A0-10%+15%	8360	797	55	Yes	2080x1990x1190	3400	Heavy	C4M or C3H	No	No
GST001/1296	Spain	111118	1000	ONAN	20	±2x2.5% +10%	0,242-0,420	24/125/50	1.1/20/10	50	3P	Dyn11	6 (0,420kV) 6 (0,242kV)	Sol. 5	N/A	Sol.4 - Sol.5	Ak+10% A0-10%+15%	8360	797	55	Yes	2080x1990x1190	3400	Very Heavy	C5M or C4H	No	No
GST001/1296N	Spain	111119	1000	KNAN	20	±2x2.5% +10%	0,242-0,420	24/125/50	1.1/20/10	50	3P	Dyn11	6 (0,420kV) 6 (0,242kV)	Sol. 5	N/A	Sol.4 - Sol.5	Ak+10% A0-10%+15%	8360	797	55	Yes	2080x1990x1190	3400	Very Heavy	C5M or C4H	No	No
GST001/1297	Spain	111121	1000	ONAN	20	±2x2.5% +10%	0,420	24/125/50	1.1/20/10	50	3P	Dyn11	6	Sol. 5	N/A	Sol. 6	Ak Ao-10%	7600	693	55	Yes	2080x1990x1190	3400	Very Heavy	C5M or C4H	No	No
GST001/1297N	Spain	111123	1000	KNAN	20	±2x2.5% +10%	0,420	24/125/50	1.1/20/10	50	3P	Dyn11	6	Sol. 5	N/A	Sol. 6	Ak Ao-10%	7600	693	55	Yes	2080x1990x1190	3400	Very Heavy	C5M or C4H	No	No
GST001/1298	Spain	111100	1000	ONAN	25	±2x2.5% +10%	0,420	36/170/70	1.1/20/10	50	3P	Dyn11	6	Sol. 5	N/A	Sol. 6	Ak+10% A0-10%+15%	8360	797	59	Yes	2190x2050x1200	3800	Heavy	C4M or C3H	No	No
GST001/1298N	Spain	111099	1000	KNAN	25	±2x2.5% +10%	0,420	36/170/70	1.1/20/10	50	3P	Dyn11	6	Sol. 5	N/A	Sol. 6	Ak+10% A0-10%+15%	8360	797	59	Yes	2190x2050x1200	3800	Heavy	C4M or C3H	No	No
GST001/1299	Spain	111096	1000	ONAN	25	±2x2.5% +10%	0,242-0,420	36/170/70	1.1/20/10	50	3P	Dyn11	6 (0,420kV) 6 (0,242kV)	Sol. 5	N/A	Sol.4 - Sol.5	Ak+10%+10% A0-10%+15%+15%	9196	916	60	Yes	2190x2050x1200	3800	Heavy	C4M or C3H	No	No
GST001/1299N	Spain	111098	1000	KNAN	25	±2x2.5% +10%	0,242-0,420	36/170/70	1.1/20/10	50	3P	Dyn11	6 (0,420kV) 6 (0,242kV)	Sol. 5	N/A	Sol.4 - Sol.5	Ak+10%+10% A0-10%+15%+15%	9196	916	60	Yes	2190x2050x1200	3800	Heavy	C4M or C3H	No	No
GST001/1300	Spain	111064	1000	ONAN	15,4-20	±2x2.5% +10%	0,420	24/125/50	1.1/20/10	50	3P	Dyn11	6	Sol. 5	N/A	Sol. 6	Ak+10% A0-10%+15%	8360	797	55	Yes	2080x1990x1190	3400	Heavy	C4M or C3H	No	No
GST001/1300N	Spain	111069	1000	KNAN	15,4-20	±2x2.5% +10%	0,420	24/125/50	1.1/20/10	50	3P	Dyn11	6	Sol. 5	N/A	Sol. 6	Ak+10% A0-10%+15%	8360	797	55	Yes	2080x1990x1190	3400	Heavy	C4M or C3H	No	No
GST001/1301	Spain	111068	1000	ONAN	15,4-20	±2x2.5% +10%	0,242-0,420	24/125/50	1.1/20/10	50	3P	Dyn11	6 (0,420kV) 6 (0,242kV)	Sol. 5	N/A	Sol.4 - Sol.5	Ak+20% A0-10%+20%	9120	832	55	Yes	2080x1990x1190	3400	Heavy	C4M or C3H	No	No
GST001/1301N	Spain	111071	1000	KNAN	15,4-20	±2x2.5% +10%	0,242-0,420	24/125/50	1.1/20/10	50	3P	Dyn11	6 (0,420kV) 6	Sol. 5	N/A	Sol.4 - Sol.5	Ak+20% A0-10%+20%	9120	832	55	Yes	2080x1990x1190	3400	Heavy	C4M or C3H	No	No

													(0,242kV)														
GST001/1302	Spain	111047	1000	ONAN	9,5-16,455	-2x5% +3x5%	0,420	24/125/50	1.1/20/10	50	3P	Yyn0-Dyn11	6	Sol. 5	N/A	Sol. 6	Ak+10% A0-10%+15%	8360	797	55	Yes	2080x1990x1190	3400	Heavy	C4M or C3H	No	No
GST001/1302N	Spain	111054	1000	KNAN	9,5-16,455	-2x5% +3x5%	0,420	24/125/50	1.1/20/10	50	3P	Yyn0-Dyn11	6	Sol. 5	N/A	Sol. 6	Ak+10% A0-10%+15%	8360	797	55	Yes	2080x1990x1190	3400	Heavy	C4M or C3H	No	No
GST001/1303	Spain	111046	1000	ONAN	9,5-16,455	-2x5% +3x5%	0,242-0,420	24/125/50	1.1/20/10	50	3P	Yyn0-Dyn11	6 (0,420kV) 6 (0,242kV)	Sol. 5	N/A	Sol.4 - Sol.5	Ak+20% A0-10%+20%	9120	832	55	Yes	2080x1990x1190	3400	Heavy	C4M or C3H	No	No
GST001/1303N	Spain	111050	1000	KNAN	9,5-16,455	-2x5% +3x5%	0,242-0,420	24/125/50	1.1/20/10	50	3P	Yyn0-Dyn11	6 (0,420kV) 6 (0,242kV)	Sol. 5	N/A	Sol.4 - Sol.5	Ak+20% A0-10%+20%	9120	832	55	Yes	2080x1990x1190	3400	Heavy	C4M or C3H	No	No
GST001/1304	Spain	111173	50	ONAN	15,4	±2x2.5%	0,420	24/125/50	1.1/20/10	50	3P	Dyn11	4	Sol. 5	N/A	Sol. 1	Ak Ao-10%	750	81	39	Yes	1350x1100x740	790	Heavy	C4M or C3H	Yes	No
GST001/1305	Spain	111167	50	ONAN	16	±2x2.5% +10%	0,420	24/125/50	1.1/20/10	50	3P	Dyn11	4	Sol. 5	N/A	Sol. 1	Ak Ao-10%	750	81	39	Yes	1350x1100x740	790	Heavy	C4M or C3H	Yes	No
GST001/1306	Spain	111115	50	ONAN	25	±2x2.5% +10%	0,420	36/170/70	1.1/20/10	50	3P	Dyn11	4,5	Sol. 5	N/A	Sol. 1	Ak+10% A0-10%+15%	825	93	43	Yes	1350x1100x780	950	Heavy	C4M or C3H	Yes	No
GST001/1307	Spain	111095	50	ONAN	15,4-20	±2x2.5% +10%	0,420	24/125/50	1.1/20/10	50	3P	Dyn11	4	Sol. 5	N/A	Sol. 1	Ak+10% A0-10%+15%	825	93	39	Yes	1350x1100x740	790	Heavy	C4M or C3H	Yes	No
GST001/1308	Spain	111067	50	ONAN	9,5-16,455	-2x5% +3x5%	0,420	24/125/50	1.1/20/10	50	3P	Yzn11 - Dzn0	4	Sol. 5	N/A	Sol. 1	Ak+10% A0-10%+15%	825	93	39	Yes	1350x1100x740	790	Heavy	C4M or C3H	Yes	No
GST001/1309	Spain	111172	100	ONAN	15,4	±2x2.5%	0,420	24/125/50	1.1/20/10	50	3P	Dyn11	4	Sol. 5	N/A	Sol. 1	Ak Ao-10%	1250	130	41	Yes	1350x1100x740	790	Heavy	C4M or C3H	Yes	No
GST001/1310	Spain	111162	100	ONAN	16	±2x2.5%	0,420	24/125/50	1.1/20/10	50	3P	Dyn11	4	Sol. 5	N/A	Sol. 1	Ak Ao-10%	1250	130	41	Yes	1350x1100x740	790	Heavy	C4M or C3H	Yes	No
GST001/1311	Spain	111117	100	ONAN	25	±2x2.5% +10%	0,420	36/170/70	1.1/20/10	50	3P	Dyn11	4,5	Sol. 5	N/A	Sol. 1	Ak+10% A0-10%+15%	1375	150	45	Yes	1350x1100x780	950	Heavy	C4M or C3H	Yes	No
GST001/1312	Spain	111093	100	ONAN	15,4-20	±2x2.5% +10%	0,420	24/125/50	1.1/20/10	50	3P	Dyn11	4	Sol. 5	N/A	Sol. 1	Ak+10% A0-10%+15%	1375	150	41	Yes	1350x1100x740	790	Heavy	C4M or C3H	Yes	No
GST001/1313	Spain	111059	100	ONAN	9,5-16,455	-2x5% +3x5%	0,420	24/125/50	1.1/20/10	50	3P	Yzn11 - Dzn0	4	Sol. 5	N/A	Sol. 1	Ak+10% A0-10%+15%	1375	150	41	Yes	1350x1100x740	790	Heavy	C4M or C3H	Yes	No
GST001/1314	Spain	111174	160	ONAN	15,4	±2x2.5%	0,420	24/125/50	1.1/20/10	50	3P	Dyn11	4	Sol. 5	N/A	Sol. 1	Ak Ao-10%	1750	189	44	Yes	1350x1200x830	1050	Heavy	C4M or C3H	Yes	No
GST001/1315	Spain	111158	160	ONAN	16	±2x2.5% +10%	0,420	24/125/50	1.1/20/10	50	3P	Dyn11	4	Sol. 5	N/A	Sol. 1	Ak Ao-10%	1750	189	44	Yes	1350x1200x830	1050	Heavy	C4M or C3H	Yes	No
GST001/1316	Spain	111163	160	ONAN	25	±2x2.5% +10%	0,420	36/170/70	1.1/20/10	50	3P	Dyn11	4,5	Sol. 5	N/A	Sol. 1	Ak+10% A0-10%+15%	1925	217	48	Yes	1350x1300x850	1200	Heavy	C4M or C3H	Yes	No
GST001/1317	Spain	111077	160	ONAN	15,4-20	±2x2.5% +10%	0,420	24/125/50	1.1/20/10	50	3P	Dyn11	4	Sol. 5	N/A	Sol. 1	Ak+10% A0-10%+15%	1925	217	44	Yes	1350x1200x830	1050	Heavy	C4M or C3H	Yes	No
GST001/1318	Spain	111057	160	ONAN	9,5-16,455	-2x5% +3x5%	0,420	24/125/50	1.1/20/10	50	3P	Yyn0-Dyn11	4	Sol. 5	N/A	Sol. 1	Ak+10% A0-10%+15%	1925	217	44	Yes	1350x1200x830	1050	Heavy	C4M or C3H	Yes	No
GST001/1502	Peru	110465	50	ONAN	10	±2x2.5%	0,23	12/75/28	1,1/- /3	60	3P	Dyn5	4	Sol. 1	480	Sol. 2 + Vertical Flag(DI	max. value	750	81	39	No	1400x1100x900	550	Very Heavy	C5M or C4H	Yes	No

																N 43675)											
GST001/1502N	Peru	110467	50	KNAN	10	±2x2.5%	0,23	12/75/28	1,1/- /3	60	3P	Dyn5	4	Sol. 1	480	Sol. 2 + Vertical Flag(DIN 43675)	max. value	750	81	39	No	1400x1100x900	550	Very Heavy	C5M or C4H	Yes	No
GST001/1503	Peru	110466	100	ONAN	10	±2x2.5%	0,23	12/75/28	1,1/- /3	60	3P	Dyn5	4	Sol. 1	480	Sol. 2 + Vertical Flag(DIN 43675)	max. value	1250	130	41	No	1500x1100x900	650	Very Heavy	C5M or C4H	Yes	No
GST001/1503N	Peru	110468	100	KNAN	10	±2x2.5%	0,23	12/75/28	1,1/- /3	60	3P	Dyn5	4	Sol. 1	480	Sol. 2 + Vertical Flag(DIN 43675)	max. value	1250	130	41	No	1500x1100x900	650	Very Heavy	C5M or C4H	Yes	No
GST001/1504	Peru	110459	160	ONAN	10	±2x2.5%	0,23	12/75/28	1,1/- /3	60	3P	Dyn5	4	Sol. 1	480	Sol. 2 + Vertical Flag(DIN 43675)	max. value	1750	189	44	No	1600x1100x1000	1000	Very Heavy	C5M or C4H	No	No
GST001/1504N	Peru	110464	160	KNAN	10	±2x2.5%	0,23	12/75/28	1,1/- /3	60	3P	Dyn5	4	Sol. 1	480	Sol. 2 + Vertical Flag(DIN 43675)	max. value	1750	189	44	No	1600x1100x1000	1000	Very Heavy	C5M or C4H	No	No
GST001/1505	Peru	110469	250	ONAN	10	±2x2.5%	0,23	12/75/28	1,1/- /3	60	3P	Dyn5	4	Sol. 1	480	Sol. 3 + Vertical Flag(DIN 43675)	max. value	2350	270	47	Yes	1700x1100x1000	1250	Very Heavy	C5M or C4H	No	No
GST001/1505N	Peru	100462	250	KNAN	10	±2x2.5%	0,23	12/75/28	1,1/- /3	60	3P	Dyn5	4	Sol. 1	480	Sol. 3 + Vertical Flag(DIN 43675)	max. value	2350	270	47	Yes	1700x1100x1000	1250	Very Heavy	C5M or C4H	No	No
GST001/1506	Peru	110455	400	ONAN	10	±2x2.5%	0,23	12/75/28	1,1/- /3	60	3P	Dyn5	4	Sol. 1	480	Sol. 3 + Vertical Flag(DI	max. value	3250	387	50	Yes	1700x1250x1000	1500	Very Heavy	C5M or C4H	No	No

																N 43675)											
GST001/1506N	Peru	110461	400	KNAN	10	±2x2.5%	0,23	12/75/28	1,1/- /3	60	3P	Dyn5	4	Sol. 1	480	Sol. 3 + Vertical Flag(DIN 43675)	max. value	3250	387	50	Yes	1700x1250x1000	1500	Very Heavy	C5M or C4H	No	No
GST001/1507	Peru	110452	630	ONAN	10	±2x2.5%	0,23	12/75/28	1,1/- /3	60	3P	Dyn5	4	Sol. 1	480	Sol. 3 + Vertical Flag(DIN 43675)	max. value	4600	540	57	Yes	1800x1250x1000	2000	Very Heavy	C5M or C4H	No	No
GST001/1507N	Peru	110441	630	KNAN	10	±2x2.5%	0,23	12/75/28	1,1/- /3	60	3P	Dyn5	4	Sol. 1	480	Sol. 3 + Vertical Flag(DIN 43675)	max. value	4600	540	57	Yes	1800x1250x1000	2000	Very Heavy	C5M or C4H	No	No
GST001/1509	Peru	110453	50	ONAN	20	±2x2.5%	0,23	24/125/50	1,1/- /3	60	3P	Dyn5	4	Sol. 1	744	Sol. 2 + Vertical Flag(DIN 43675)	max. value	750	81	39	No	1400x1100x900	550	Very Heavy	C5M or C4H	Yes	No
GST001/1509N	Peru	110648	50	KNAN	20	±2x2.5%	0,23	24/125/50	1,1/- /3	60	3P	Dyn5	4	Sol. 1	744	Sol. 2 + Vertical Flag(DIN 43675)	max. value	750	81	39	No	1400x1100x900	550	Very Heavy	C5M or C4H	Yes	No
GST001/1510	Peru	110450	100	ONAN	20	±2x2.5%	0,23	24/125/50	1,1/- /3	60	3P	Dyn5	4	Sol. 1	744	Sol. 2 + Vertical Flag(DIN 43675)	max. value	1250	130	41	No	1500x1100x900	650	Very Heavy	C5M or C4H	Yes	No
GST001/1510N	Peru	110643	100	KNAN	20	±2x2.5%	0,23	24/125/50	1,1/- /3	60	3P	Dyn5	4	Sol. 1	744	Sol. 2 + Vertical Flag(DIN 43675)	max. value	1250	130	41	No	1500x1100x900	650	Very Heavy	C5M or C4H	Yes	No
GST001/1511	Peru	110449	160	ONAN	20	±2x2.5%	0,23	24/125/50	1,1/- /3	60	3P	Dyn5	4	Sol. 1	744	Sol. 2 + Vertical Flag(DI	max. value	1750	189	44	No	1600x1100x1000	1000	Very Heavy	C5M or C4H	No	No

																N 43675)											
GST001/1511N	Peru	110645	160	KNAN	20	±2x2.5%	0,23	24/125/50	1,1/- /3	60	3P	Dyn5	4	Sol. 1	744	Sol. 2 + Vertical Flag(DIN 43675)	max. value	1750	189	44	No	1600x1100x1000	1000	Very Heavy	C5M or C4H	No	No
GST001/1512	Peru	110458	250	ONAN	20	±2x2.5%	0,23	24/125/50	1,1/- /3	60	3P	Dyn5	4	Sol. 1	744	Sol. 3 + Vertical Flag(DIN 43675)	max. value	2350	270	47	Yes	1700x1100x1000	1250	Very Heavy	C5M or C4H	No	No
GST001/1512N	Peru	110646	250	KNAN	20	±2x2.5%	0,23	24/125/50	1,1/- /3	60	3P	Dyn5	4	Sol. 1	744	Sol. 3 + Vertical Flag(DIN 43675)	max. value	2350	270	47	Yes	1700x1100x1000	1250	Very Heavy	C5M or C4H	No	No
GST001/1513	Peru	110448	50	ONAN	22,9	±2x2.5%	0,23	24/125/50	1,1/- /3	60	3P	Dyn5	4	Sol. 1	744	Sol. 2 + Vertical Flag(DIN 43675)	max. value	750	81	39	No	1520x1100x740	790	Very Heavy	C5M or C4H	Yes	Yes
GST001/1513N	Peru	110641	50	KNAN	22,9	±2x2.5%	0,23	24/125/50	1,1/- /3	60	3P	Dyn5	4	Sol. 1	744	Sol. 2 + Vertical Flag(DIN 43675)	max. value	750	81	39	No	1520x1100x740	790	Very Heavy	C5M or C4H	Yes	Yes
GST001/1514	Peru	110444	100	ONAN	22,9	±2x2.5%	0,23	24/125/50	1,1/- /3	60	3P	Dyn5	4	Sol. 1	744	Sol. 2 + Vertical Flag(DIN 43675)	max. value	1250	130	41	No	1520x1100x740	790	Very Heavy	C5M or C4H	Yes	Yes
GST001/1514N	Peru	110639	100	KNAN	22,9	±2x2.5%	0,23	24/125/50	1,1/- /3	60	3P	Dyn5	4	Sol. 1	744	Sol. 2 + Vertical Flag(DIN 43675)	max. value	1250	130	41	No	1520x1100x740	790	Very Heavy	C5M or C4H	Yes	Yes
GST001/1515	Peru	110457	160	ONAN	22,9	±2x2.5%	0,23	24/125/50	1,1/- /3	60	3P	Dyn5	4	Sol. 1	744	Sol. 2 + Vertical Flag(DI	max. value	1750	189	44	No	1570x1200x830	1050	Very Heavy	C5M or C4H	No	Yes

																N 43675)											
GST001/1515N	Peru	110638	160	KNAN	22,9	±2x2.5%	0,23	24/125/50	1,1/- /3	60	3P	Dyn5	4	Sol. 1	744	Sol. 2 + Vertical Flag(DIN 43675)	max. value	1750	189	44	No	1570x1200x830	1050	Very Heavy	C5M or C4H	No	Yes
GST001/1516	Peru	110454	250	ONAN	10	±2x2.5%	0,23	12/75/28	1,1/- /3	60	3P	Dyn5	4	Sol. 5	N/A	Sol. 6	max. value	2350	270	47	Yes	1700x1400x900	1400	Very Heavy	C5M or C4H	No	No
GST001/1516N	Peru	110447	250	KNAN	10	±2x2.5%	0,23	12/75/28	1,1/- /3	60	3P	Dyn5	4	Sol. 5	N/A	Sol. 6	max. value	2350	270	47	Yes	1700x1400x900	1400	Very Heavy	C5M or C4H	No	No
GST001/1517	Peru	110445	250	ONAN	20	±2x2.5%	0,23	24/125/50	1,1/- /3	60	3P	Dyn5	4	Sol. 5	N/A	Sol. 6	max. value	2350	270	47	Yes	1700x1400x900	1400	Very Heavy	C5M or C4H	No	No
GST001/1517N	Peru	110644	250	KNAN	20	±2x2.5%	0,23	24/125/50	1,1/- /3	60	3P	Dyn5	4	Sol. 5	N/A	Sol. 6	max. value	2350	270	47	Yes	1700x1400x900	1400	Very Heavy	C5M or C4H	No	No
GST001/1518	Peru	110463	400	ONAN	10	±2x2.5%	0,23	12/75/28	1,1/- /3	60	3P	Dyn5	4	Sol. 5	N/A	Sol. 6	max. value	3250	387	50	Yes	1850x1600x1000	1950	Very Heavy	C5M or C4H	No	No
GST001/1518N	Peru	110451	400	KNAN	10	±2x2.5%	0,23	12/75/28	1,1/- /3	60	3P	Dyn5	4	Sol. 5	N/A	Sol. 6	max. value	3250	387	50	Yes	1850x1600x1000	1950	Very Heavy	C5M or C4H	No	No
GST001/1519	Peru	110443	400	ONAN	20	±2x2.5%	0,23	24/125/50	1,1/- /3	60	3P	Dyn5	4	Sol. 1	744	Sol. 3 + Vertical Flag(DIN 43675)	max. value	3250	387	50	Yes	1700x1250x1000	1500	Very Heavy	C5M or C4H	No	No
GST001/1519N	Peru	110642	400	KNAN	20	±2x2.5%	0,23	24/125/50	1,1/- /3	60	3P	Dyn5	4	Sol. 1	744	Sol. 3 + Vertical Flag(DIN 43675)	max. value	3250	387	50	Yes	1700x1250x1000	1500	Very Heavy	C5M or C4H	No	No
GST001/1520	Peru	110442	400	ONAN	20	±2x2.5%	0,23	24/125/50	1,1/- /3	60	3P	Dyn5	4	Sol. 5	N/A	Sol. 6	max. value	3250	387	50	Yes	1850x1600x1000	1950	Very Heavy	C5M or C4H	No	No
GST001/1520N	Peru	110640	400	KNAN	20	±2x2.5%	0,23	24/125/50	1,1/- /3	60	3P	Dyn5	4	Sol. 5	N/A	Sol. 6	max. value	3250	387	50	Yes	1850x1600x1000	1950	Very Heavy	C5M or C4H	No	No
GST001/1521	Peru	110446	630	ONAN	10	±2x2.5%	0,23	12/75/28	1,1/- /3	60	3P	Dyn5	4	Sol. 5	N/A	Sol. 6	max. value	4600	540	52	Yes	1850x1600x1200	2500	Very Heavy	C5M or C4H	No	No
GST001/1521N	Peru	110460	630	KNAN	10	±2x2.5%	0,23	12/75/28	1,1/- /3	60	3P	Dyn5	4	Sol. 5	N/A	Sol. 6	max. value	4600	540	52	Yes	1850x1600x1200	2500	Very Heavy	C5M or C4H	No	No
GST001/1522	Peru	110456	630	ONAN	20	±2x2.5%	0,23	24/125/50	1,1/- /3	60	3P	Dyn5	4	Sol. 5	N/A	Sol. 6	max. value	4600	540	52	Yes	1850x1600x1200	2500	Very Heavy	C5M or C4H	No	No
GST001/1522N	Peru	110647	630	KNAN	20	±2x2.5%	0,23	24/125/50	1,1/- /3	60	3P	Dyn5	4	Sol. 5	N/A	Sol. 6	max. value	4600	540	52	Yes	1850x1600x1200	2500	Very Heavy	C5M or C4H	No	No
GST001/1718N	Colombia	110470	5	KNAN	11,4	+/- 2 x 2,5%	0,24	17,5/125/38	1,1/- /3	60	2P	Li0	3	Sol. 6	431	Sol. 8 Eyebolt	max. value	90	11	48	No	-	unrestricted	Medium	C3M	Yes	Yes
GST001/1719N	Colombia	110471	5	KNAN	13,2	+/- 2 x 2,5%	0,24	17,5/125/38	1,1/- /3	60	2P	Li0	3	Sol. 6	458	Sol. 8 Eyebolt	max. value	90	11	48	No	-	unrestricted	Medium	C3M	Yes	Yes

GST001/1720N	Colombia	110472	5	KNAN	11,4 - 13,2	+/- 2 x 2,5%	0,24	17,5/125/38	1,1/- /3	60	2P	Li0	3	Sol. 6	458	Sol. 8 Eyebolt	max. value	99	12	48	No	-	unrestricted	Medium	C3M	Yes	Yes
GST001/1721N	Colombia	110473	15	KNAN	11,4	+/- 2 x 2,5%	0,24	17,5/125/38	1,1/- /3	60	2P	Li0	3	Sol. 6	431	Sol. 8 Eyebolt	max. value	195	29	48	No	-	unrestricted	Medium	C3M	Yes	Yes
GST001/1722	Colombia	110474	15	ONAN	13,2	+/- 2 x 2,5%	0,24	17,5/125/38	1,1/- /3	60	2P	Li0	3	Sol. 6	458	Sol. 8 Eyebolt	max. value	195	29	48	No	-	unrestricted	Medium	C3M	Yes	Yes
GST001/1722N	Colombia	110475	15	KNAN	13,2	+/- 2 x 2,5%	0,24	17,5/125/38	1,1/- /3	60	2P	Li0	3	Sol. 6	458	Sol. 8 Eyebolt	max. value	195	29	48	No	-	unrestricted	Medium	C3M	Yes	Yes
GST001/1723	Colombia	110476	15	ONAN	11,4 - 13,2	+/- 2 x 2,5%	0,24	17,5/125/38	1,1/- /3	60	2P	Li0	3	Sol. 6	458	Sol. 8 Eyebolt	max. value	215	33	48	No	-	unrestricted	Medium	C3M	Yes	Yes
GST001/1723N	Colombia	110477	15	KNAN	11,4 - 13,2	+/- 2 x 2,5%	0,24	17,5/125/38	1,1/- /3	60	2P	Li0	3	Sol. 6	458	Sol. 8 Eyebolt	max. value	215	33	48	No	-	unrestricted	Medium	C3M	Yes	Yes
GST001/1724	Colombia	110478	25	ONAN	11,4	+/- 2 x 2,5%	0,214	17,5/125/38	1,1/- /3	60	3P	Dyn5	3	Sol. 6	431	Sol. 8 Eyebolt	max. value	515	63	48	No	-	unrestricted	Medium	C3M	Yes	Yes
GST001/1724N	Colombia	110479	25	KNAN	11,4	+/- 2 x 2,5%	0,214	17,5/125/38	1,1/- /3	60	3P	Dyn5	3	Sol. 6	431	Sol. 8 Eyebolt	max. value	515	63	48	No	-	unrestricted	Medium	C3M	Yes	Yes
GST001/1725	Colombia	110480	25	ONAN	13,2	+/- 2 x 2,5%	0,214	17,5/125/38	1,1/- /3	60	3P	Dyn5	3	Sol. 6	458	Sol. 8 Eyebolt	max. value	515	63	48	No	-	unrestricted	Medium	C3M	Yes	Yes
GST001/1725N	Colombia	110481	25	KNAN	13,2	+/- 2 x 2,5%	0,214	17,5/125/38	1,1/- /3	60	3P	Dyn5	3	Sol. 6	458	Sol. 8 Eyebolt	max. value	515	63	48	No	-	unrestricted	Medium	C3M	Yes	Yes
GST001/1726	Colombia	110482	25	ONAN	11,4 - 13,2	+/- 2 x 2,5%	0,214	17,5/125/38	1,1/- /3	60	3P	Dyn5	3	Sol. 6	458	Sol. 8 Eyebolt	max. value	567	72	48	No	-	unrestricted	Medium	C3M	Yes	Yes
GST001/1726N	Colombia	110483	25	KNAN	11,4 - 13,2	+/- 2 x 2,5%	0,214	17,5/125/38	1,1/- /3	60	3P	Dyn5	3	Sol. 6	458	Sol. 8 Eyebolt	max. value	567	72	48	No	-	unrestricted	Medium	C3M	Yes	Yes
GST001/1727	Colombia	110484	50	ONAN	11,4	+/- 2 x 2,5%	0,214	17,5/125/38	1,1/- /3	60	3P	Dyn5	3	Sol. 6	431	Sol. 8 Eyebolt	max. value	750	81	48	No	-	unrestricted	Medium	C3M	Yes	Yes
GST001/1727N	Colombia	110485	50	KNAN	11,4	+/- 2 x 2,5%	0,214	17,5/125/38	1,1/- /3	60	3P	Dyn5	3	Sol. 6	431	Sol. 8 Eyebolt	max. value	750	81	48	No	-	unrestricted	Medium	C3M	Yes	Yes
GST001/1728	Colombia	110486	50	ONAN	13,2	+/- 2 x 2,5%	0,214	17,5/125/38	1,1/- /3	60	3P	Dyn5	3	Sol. 6	458	Sol. 8 Eyebolt	max. value	750	81	48	No	-	unrestricted	Medium	C3M	Yes	Yes
GST001/1728N	Colombia	110487	50	KNAN	13,2	+/- 2 x 2,5%	0,214	17,5/125/38	1,1/- /3	60	3P	Dyn5	3	Sol. 6	458	Sol. 8 Eyebolt	max. value	750	81	48	No	-	unrestricted	Medium	C3M	Yes	Yes
GST001/1729	Colombia	110488	50	ONAN	11,4 - 13,2	+/- 2 x 2,5%	0,214	17,5/125/38	1,1/- /3	60	3P	Dyn5	3	Sol. 6	458	Sol. 8 Eyebolt	max. value	825	93	48	No	-	unrestricted	Medium	C3M	Yes	Yes
GST001/1729N	Colombia	110489	50	KNAN	11,4 - 13,2	+/- 2 x 2,5%	0,214	17,5/125/38	1,1/- /3	60	3P	Dyn5	3	Sol. 6	458	Sol. 8 Eyebolt	max. value	825	93	48	No	-	unrestricted	Medium	C3M	Yes	Yes

GST001/1733	Colombia	110496	100	ONAN	11,4	+/- 2 x 2,5%	0,214	17,5/125/38	1,1/- /3	60	3P	Dyn5	3,5	Sol. 6	431	Sol. 8 Spade H	max. value	1250	130	51	No	-	unrestricted	Medium	C3M	Yes	Yes
GST001/1733N	Colombia	110497	100	KNAN	11,4	+/- 2 x 2,5%	0,214	17,5/125/38	1,1/- /3	60	3P	Dyn5	3,5	Sol. 6	431	Sol. 8 Spade H	max. value	1250	130	51	No	-	unrestricted	Medium	C3M	Yes	Yes
GST001/1734	Colombia	110498	100	ONAN	13,2	+/- 2 x 2,5%	0,214	17,5/125/38	1,1/- /3	60	3P	Dyn5	3,5	Sol. 6	458	Sol. 8 Spade H	max. value	1250	130	51	No	-	unrestricted	Medium	C3M	Yes	Yes
GST001/1734N	Colombia	110499	100	KNAN	13,2	+/- 2 x 2,5%	0,214	17,5/125/38	1,1/- /3	60	3P	Dyn5	3,5	Sol. 6	458	Sol. 8 Spade H	max. value	1250	130	51	No	-	unrestricted	Medium	C3M	Yes	Yes
GST001/1735	Colombia	110500	100	ONAN	11,4 - 13,2	+/- 2 x 2,5%	0,214	17,5/125/38	1,1/- /3	60	3P	Dyn5	3,5	Sol. 6	458	Sol. 8 Spade H	max. value	1375	150	51	No	-	unrestricted	Medium	C3M	Yes	Yes
GST001/1735N	Colombia	110501	100	KNAN	11,4 - 13,2	+/- 2 x 2,5%	0,214	17,5/125/38	1,1/- /3	60	3P	Dyn5	3,5	Sol. 6	458	Sol. 8 Spade H	max. value	1375	150	51	No	-	unrestricted	Medium	C3M	Yes	Yes
GST001/1737	Colombia	110504	160	ONAN	11,4	+/- 2 x 2,5%	0,214	17,5/125/38	1,1/- /3	60	3P	Dyn5	4	Sol. 6	431	Sol. 8 Spade H	max. value	1750	189	55	No	L<=1800	700	Medium	C3M	Yes	Yes
GST001/1737N	Colombia	110505	160	KNAN	11,4	+/- 2 x 2,5%	0,214	17,5/125/38	1,1/- /3	60	3P	Dyn5	4	Sol. 6	431	Sol. 8 Spade H	max. value	1750	189	55	No	L<=1800	700	Medium	C3M	Yes	Yes
GST001/1738	Colombia	110506	160	ONAN	13,2	+/- 2 x 2,5%	0,214	17,5/125/38	1,1/- /3	60	3P	Dyn5	4	Sol. 6	458	Sol. 8 Spade H	max. value	1750	189	55	No	L<=1800	700	Medium	C3M	Yes	Yes
GST001/1738N	Colombia	110507	160	KNAN	13,2	+/- 2 x 2,5%	0,214	17,5/125/38	1,1/- /3	60	3P	Dyn5	4	Sol. 6	458	Sol. 8 Spade H	max. value	1750	189	55	No	L<=1800	700	Medium	C3M	Yes	Yes
GST001/1739	Colombia	110508	160	ONAN	11,4 - 13,2	+/- 2 x 2,5%	0,214	17,5/125/38	1,1/- /3	60	3P	Dyn5	4	Sol. 6	458	Sol. 8 Spade H	max. value	1925	217	55	No	L<=1800	700	Medium	C3M	Yes	Yes
GST001/1739N	Colombia	110509	160	KNAN	11,4 - 13,2	+/- 2 x 2,5%	0,214	17,5/125/38	1,1/- /3	60	3P	Dyn5	4	Sol. 6	458	Sol. 8 Spade H	max. value	1925	217	55	No	L<=1800	700	Medium	C3M	Yes	Yes
GST001/1740	Colombia	110510	160	ONAN	34,5	+/- 2 x 2,5%	0,214	36/200/38	1,1/- /3	60	3P	Dyn5	4	Sol. 6	458	Sol. 8 Spade H	max. value	1925	217	55	No	L<=1800	700	Medium	C3M	Yes	Yes
GST001/1740N	Colombia	110511	160	KNAN	34,5	+/- 2 x 2,5%	0,214	36/200/38	1,1/- /3	60	3P	Dyn5	4	Sol. 6	900	Sol. 8 Spade H	max. value	1925	217	55	No	L<=1800	700	Medium	C3M	Yes	Yes
GST001/1742	Colombia	110514	250	ONAN	11,4	+/- 2 x 2,5%	0,214	17,5/125/38	1,1/- /3	60	3P	Dyn5	4	Sol. 6	431	Sol. 8 Spade H	max. value	2350	270	55	Yes	L<=1800	unrestricted	Medium	C3M	No	Yes
GST001/1742N	Colombia	110515	250	KNAN	11,4	+/- 2 x 2,5%	0,214	17,5/125/38	1,1/- /3	60	3P	Dyn5	4	Sol. 6	431	Sol. 8 Spade H	max. value	2350	270	55	Yes	L<=1800	unrestricted	Medium	C3M	No	Yes
GST001/1743	Colombia	110516	250	ONAN	11,4 - 13,2	+/- 2 x 2,5%	0,214	17,5/125/38	1,1/- /3	60	3P	Dyn5	4	Sol. 6	458	Sol. 8 Spade H	max. value	2585	311	55	Yes	L<=1800	unrestricted	Medium	C3M	No	Yes
GST001/1743N	Colombia	110517	250	KNAN	11,4 - 13,2	+/- 2 x 2,5%	0,214	17,5/125/38	1,1/- /3	60	3P	Dyn5	4	Sol. 6	458	Sol. 8 Spade H	max. value	2585	311	55	Yes	L<=1800	unrestricted	Medium	C3M	No	Yes
GST001/1744	Colombia	110518	400	ONAN	11,4	+/- 2 x 2,5%	0,214	17,5/125/38	1,1/- /3	60	3P	Dyn5	4,5	Sol. 6	431	Sol. 7	max. value	3250	387	56	Yes	-	unrestricted	Medium	C3M	No	Yes

GST001/1744N	Colombia	110519	400	KNAN	11,4	+/- 2 x 2,5%	0,214	17,5/125/38	1,1/- /3	60	3P	Dyn5	4,5	Sol. 6	431	Sol. 7	max. value	3250	387	56	Yes	-	unrestricted	Medium	C3M	No	Yes
GST001/1745	Colombia	110520	400	ONAN	11,4 - 13,2	+/- 2 x 2,5%	0,214	17,5/125/38	1,1/- /3	60	3P	Dyn5	4,5	Sol. 6	458	Sol. 7	max. value	3575	445	56	Yes	-	unrestricted	Medium	C3M	No	Yes
GST001/1745N	Colombia	110521	400	KNAN	11,4 - 13,2	+/- 2 x 2,5%	0,214	17,5/125/38	1,1/- /3	60	3P	Dyn5	4,5	Sol. 6	458	Sol. 7	max. value	3575	445	56	Yes	-	unrestricted	Medium	C3M	No	Yes
GST001/1746	Colombia	110522	400	ONAN	11,4	+/- 2 x 2,5%	0,214	17,5/125/38	1,1/- /3	60	3P	Dyn5	4,5	Sol. 5	N/A	Sol. 7	max. value	3250	387	55	Yes	1501x1696x990	unrestricted	Medium	C3M	No	No
GST001/1746N	Colombia	110523	400	KNAN	11,4	+/- 2 x 2,5%	0,214	17,5/125/38	1,1/- /3	60	3P	Dyn5	4,5	Sol. 5	N/A	Sol. 7	max. value	3250	387	55	Yes	1501x1696x990	unrestricted	Medium	C3M	No	No
GST001/1748	Colombia	110526	630	ONAN	11,4 - 13,2	+/- 2 x 2,5%	0,214	17,5/125/38	1,1/- /3	60	3P	Dyn5	5	Sol. 6	458	Sol. 7	max. value	5060	621	57	Yes	-	unrestricted	Medium	C3M	No	Yes
GST001/1748N	Colombia	110527	630	KNAN	11,4 - 13,2	+/- 2 x 2,5%	0,214	17,5/125/38	1,1/- /3	60	3P	Dyn5	5	Sol. 6	458	Sol. 7	max. value	5060	621	57	Yes	-	unrestricted	Medium	C3M	No	Yes
GST001/1749	Colombia	110528	1000	ONAN	11,4 - 13,2	+/- 2 x 2,5%	0,214	17,5/125/38	1,1/- /3	60	3P	Dyn5	5	Sol. 6	458	Sol. 7	max. value	8360	797	58	Yes	-	unrestricted	Medium	C3M	No	Yes
GST001/1749N	Colombia	110529	1000	KNAN	11,4 - 13,2	+/- 2 x 2,5%	0,214	17,5/125/38	1,1/- /3	60	3P	Dyn5	5	Sol. 6	458	Sol. 7	max. value	8360	797	58	Yes	-	unrestricted	Medium	C3M	No	Yes
GST001/1751N	Colombia	110649	160	KNAN	11,4	+/- 2 x 2,5%	0,214	17,5/125/38	1,1/- /3	60	3P	Dyn5	4	Sol. 5	N/A	Sol. 7	max. value	1750	189	55	Yes	L<=1800	700	Medium	C3M	No	Yes
GST001/1752N	Colombia	110650	250	KNAN	11,4	+/- 2 x 2,5%	0,214	17,5/125/38	1,1/- /3	60	3P	Dyn5	4	Sol. 5	N/A	Sol. 7	max. value	2350	270	55	Yes	L<=1800	unrestricted	Medium	C3M	No	Yes
GST001/1754N	Colombia	110651	630	KNAN	11,4	+/- 2 x 2,5%	0,214	17,5/125/38	1,1/- /3	60	3P	Dyn5	5	Sol. 5	N/A	Sol. 7	max. value	4600	540	56	Yes	-	unrestricted	Medium	C3M	No	No
GST001/1755N	Colombia	110652	1000	KNAN	11,4	+/- 2 x 2,5%	0,214	17,5/125/38	1,1/- /3	60	3P	Dyn5	5	Sol. 5	N/A	Sol. 7	max. value	7600	693	58	Yes	-	unrestricted	Medium	C3M	No	No
GST001/1756N	Colombia	110665	50	KNAN	11,4	+/- 2 x 2,5%	0,214	17,5/125/38	1,1/- /3	60	3P	Dyn5	3	Sol. 5	N/A	Sol. 7	max. value	750	81	48	No	-	unrestricted	Medium	C3M	Yes	Yes
GST001/1757N	Colombia	110666	100	KNAN	11,4	+/- 2 x 2,5%	0,214	17,5/125/38	1,1/- /3	60	3P	Dyn5	3,5	Sol. 5	N/A	Sol. 7	max. value	1250	130	51	No	-	unrestricted	Medium	C3M	Yes	Yes
GST001/1758N	Colombia	110667	160	KNAN	11,4	+/- 2 x 2,5%	0,214	17,5/125/38	1,1/- /3	60	3P	Dyn5	4	Sol. 5	N/A	Sol. 7	max. value	1750	189	55	No	L<=1800	700	Medium	C3M	Yes	Yes
GST001/1839	Chile	110637	50	ONAN	12	±2x2.5%	0,400	17,5/95/38	1.1/20/10	50	3P	Dyn1	4	Sol. 6	350	Sol. 8	Max. Value	750	81	48	No	1150x1300x1200	<550	Medium	C3M	Yes	Yes
GST001/1839N	Chile	110635	50	KNAN	12	±2x2.5%	0,400	17,5/95/38	1.1/20/10	50	3P	Dyn1	4	Sol. 6	350	Sol. 8	Max. Value	750	81	48	No	1150x1300x1200	<550	Medium	C3M	Yes	Yes
GST001/1840	Chile	110636	50	ONAN	23	±2x2.5%	0,400	36/170/70	1.1/20/10	50	3P	Dyn1	4	Sol. 6	720	Sol. 8	Max. Value	825	93	48	No	1150x1300x1200	<550	Medium	C3M	Yes	Yes
GST001/1840N	Chile	110634	50	KNAN	23	±2x2.5%	0,400	36/170/70	1.1/20/10	50	3P	Dyn1	4	Sol. 6	720	Sol. 8	Max. Value	825	93	48	No	1150x1300x1200	<550	Medium	C3M	Yes	Yes
GST001/1841	Chile	110633	100	ONAN	12	±2x2.5%	0,400	17,5/95/38	1.1/20/10	50	3P	Dyn1	4	Sol. 6	350	Sol. 8	Max. Value	1250	130	51	No	1520x1100x740	<1900	Medium	C3M	Yes	Yes
GST001/1841N	Chile	110631	100	KNAN	12	±2x2.5%	0,400	17,5/95/38	1.1/20/10	50	3P	Dyn1	4	Sol. 6	350	Sol. 8	Max. Value	1250	130	51	No	1520x1100x740	<1900	Medium	C3M	Yes	Yes
GST001/1842	Chile	110632	100	ONAN	23	±2x2.5%	0,400	36/170/70	1.1/20/10	50	3P	Dyn1	4	Sol. 6	720	Sol. 8	Max. Value	1375	150	51	No	1520x1100x740	<1900	Medium	C3M	Yes	Yes
GST001/1842N	Chile	110630	100	KNAN	23	±2x2.5%	0,400	36/170/70	1.1/20/10	50	3P	Dyn1	4	Sol. 6	720	Sol. 8	Max. Value	1375	150	51	No	1520x1100x740	<1900	Medium	C3M	Yes	Yes

GST001/1843	Chile	110629	160	ONAN	12	±2x2.5%	0,400	17,5/95/38	1.1/20/10	50	3P	Dyn1	4	Sol. 6	350	Sol. 8	Max. Value	1750	189	55	No	1800x1600x1400	<1900	Medium	C3M	Yes	Yes
GST001/1843N	Chile	110627	160	KNAN	12	±2x2.5%	0,400	17,5/95/38	1.1/20/10	50	3P	Dyn1	4	Sol. 6	350	Sol. 8	Max. Value	1750	189	55	No	1800x1600x1400	<1900	Medium	C3M	Yes	Yes
GST001/1844	Chile	110628	160	ONAN	23	±2x2.5%	0,400	36/170/70	1.1/20/10	50	3P	Dyn1	4	Sol. 6	720	Sol. 8	Max. Value	1925	217	55	No	1800x1600x1400	<1900	Medium	C3M	Yes	Yes
GST001/1844N	Chile	110626	160	KNAN	23	±2x2.5%	0,400	36/170/70	1.1/20/10	50	3P	Dyn1	4	Sol. 6	720	Sol. 8	Max. Value	1925	217	55	No	1800x1600x1400	<1900	Medium	C3M	Yes	Yes
GST001/1845	Chile	110625	250	ONAN	12	±2x2.5%	0,400	17,5/95/38	1.1/20/10	50	3P	Dyn1	4	Sol. 6	350	Sol. 8	Max. Value	2350	270	55	No	1800x1600x1400	<1900	Medium	C3M	Yes	Yes
GST001/1845N	Chile	110623	250	KNAN	12	±2x2.5%	0,400	17,5/95/38	1.1/20/10	50	3P	Dyn1	4	Sol. 6	350	Sol. 8	Max. Value	2350	270	55	No	1800x1600x1400	<1900	Medium	C3M	Yes	Yes
GST001/1846	Chile	110624	250	ONAN	23	±2x2.5%	0,400	36/170/70	1.1/20/10	50	3P	Dyn1	4	Sol. 6	720	Sol. 8	Max. Value	2585	311	55	No	1800x1600x1400	<1900	Medium	C3M	Yes	Yes
GST001/1846N	Chile	110622	250	KNAN	23	±2x2.5%	0,400	36/170/70	1.1/20/10	50	3P	Dyn1	4	Sol. 6	720	Sol. 8	Max. Value	2585	311	55	No	1800x1600x1400	<1900	Medium	C3M	Yes	Yes
GST001/1847	Chile	110621	400	ONAN	12	±2x2.5%	0,400	17,5/95/38	1.1/20/10	50	3P	Dyn1	4	Sol. 6	350	Sol. 8	Max. Value	3250	387	56	No	1800x1600x1400	<1900	Medium	C3M	Yes	Yes
GST001/1847N	Chile	110619	400	KNAN	12	±2x2.5%	0,400	17,5/95/38	1.1/20/10	50	3P	Dyn1	4	Sol. 6	350	Sol. 8	Max. Value	3250	387	56	No	1800x1600x1400	<1900	Medium	C3M	Yes	Yes
GST001/1848	Chile	110617	400	ONAN	12	±2x2.5%	0,400	24/125/50	1.1/20/10	50	3P	Dyn1	4	Sol. 5	N/A	Sol. 6	Max. Value	3250	387	56	Yes	1300x1600x1000	<1500	Medium	C3M	No	No
GST001/1848N	Chile	110615	400	KNAN	12	±2x2.5%	0,400	24/125/50	1.1/20/10	50	3P	Dyn1	4	Sol. 5	N/A	Sol. 6	Max. Value	3250	387	56	Yes	1300x1600x1000	<1500	Medium	C3M	No	No
GST001/1849	Chile	110620	400	ONAN	23	±2x2.5%	0,400	36/170/70	1.1/20/10	50	3P	Dyn1	4	Sol. 6	720	Sol. 8	Max. Value	3575	445	56	No	1800x1600x1400	<1900	Medium	C3M	Yes	Yes
GST001/1849N	Chile	110618	400	KNAN	23	±2x2.5%	0,400	36/170/70	1.1/20/10	50	3P	Dyn1	4	Sol. 6	720	Sol. 8	Max. Value	3575	445	56	No	1800x1600x1400	<1900	Medium	C3M	Yes	Yes
GST001/1850	Chile	110616	400	ONAN	23	±2x2.5%	0,400	36/170/70	1.1/20/10	50	3P	Dyn1	4	Sol. 5	N/A	Sol. 6	Max. Value	3575	445	56	Yes	1300x1600x1000	<1500	Medium	C3M	No	No
GST001/1850N	Chile	110614	400	KNAN	23	±2x2.5%	0,400	36/170/70	1.1/20/10	50	3P	Dyn1	4	Sol. 5	N/A	Sol. 6	Max. Value	3575	445	56	Yes	1300x1600x1000	<1500	Medium	C3M	No	No
GST001/1851	Chile	110613	630	ONAN	12	±2x2.5%	0,400	24/125/50	1.1/20/10	50	3P	Dyn1	4	Sol. 5	N/A	Sol. 6	Max. Value	4600	540	56	Yes	1500x1650x1000	<1750	Medium	C3M	No	No
GST001/1851N	Chile	110611	630	KNAN	12	±2x2.5%	0,400	24/125/50	1.1/20/10	50	3P	Dyn1	4	Sol. 5	N/A	Sol. 6	Max. Value	4600	540	56	Yes	1500x1650x1000	<1750	Medium	C3M	No	No
GST001/1852	Chile	110612	630	ONAN	23	±2x2.5%	0,400	36/170/70	1.1/20/10	50	3P	Dyn1	4	Sol. 5	N/A	Sol. 6	Max. Value	5060	621	56	Yes	1500x1650x1000	<1750	Medium	C3M	No	No
GST001/1852N	Chile	110610	630	KNAN	23	±2x2.5%	0,400	36/170/70	1.1/20/10	50	3P	Dyn1	4	Sol. 5	N/A	Sol. 6	Max. Value	5060	621	56	Yes	1500x1650x1000	<1750	Medium	C3M	No	No
GST001/1853	Chile	110609	800	ONAN	12	±2x2.5%	0,400	24/125/50	1.1/20/10	50	3P	Dyn1	5	Sol. 5	N/A	Sol. 6	Max. Value	6000	585	56	Yes	1500x1900x1100	<2200	Medium	C3M	No	No
GST001/1853N	Chile	110607	800	KNAN	12	±2x2.5%	0,400	24/125/50	1.1/20/10	50	3P	Dyn1	5	Sol. 5	N/A	Sol. 6	Max. Value	6000	585	56	Yes	1500x1900x1100	<2200	Medium	C3M	No	No
GST001/1854	Chile	110608	800	ONAN	23	±2x2.5%	0,400	36/170/70	1.1/20/10	50	3P	Dyn1	5	Sol. 5	N/A	Sol. 6	Max. Value	6600	673	56	Yes	1500x1900x1100	<2200	Medium	C3M	No	No
GST001/1854N	Chile	110606	800	KNAN	23	±2x2.5%	0,400	36/170/70	1.1/20/10	50	3P	Dyn1	5	Sol. 5	N/A	Sol. 6	Max. Value	6600	673	56	Yes	1500x1900x1100	<2200	Medium	C3M	No	No
GST001/1855	Chile	110605	1000	ONAN	12	±2x2.5%	0,400	24/125/50	1.1/20/10	50	3P	Dyn1	5	Sol. 5	N/A	Sol. 6	Max. Value	7600	693	56	Yes	2000x2050x1200	<2400	Medium	C3M	No	No
GST001/1855N	Chile	110603	1000	KNAN	12	±2x2.5%	0,400	24/125/50	1.1/20/10	50	3P	Dyn1	5	Sol. 5	N/A	Sol. 6	Max. Value	7600	693	56	Yes	2000x2050x1200	<2400	Medium	C3M	No	No

GST001/1856	Chile	110604	1000	ONAN	23	±2x2.5%	0,400	36/170/70	1.1/20/10	50	3P	Dyn1	5	Sol. 5	N/A	Sol. 6	Max. Value	8360	797	56	Yes	2000x2050x1200	<2400	Medium	C3M	No	No
GST001/1856N	Chile	110602	1000	KNAN	23	±2x2.5%	0,400	36/170/70	1.1/20/10	50	3P	Dyn1	5	Sol. 5	N/A	Sol. 6	Max. Value	8360	797	56	Yes	2000x2050x1200	<2400	Medium	C3M	No	No
GST001/1601	Brazil	110549	10	ONAN	13,8	+1x4,35% - 3x4,35%	0,22	17,5/95/38	1,1/-/3	60	2P	Ii0	2,5	Sol. 6	543	Sol. 8	Max. value	160	20	48	No	1200x800x900	950	Very heavy	C5M or C4H	Yes	Yes
GST001/1601N	Brazil	110653	10	KNAN	13,8	+1x4,35% - 3x4,35%	0,22	17,5/95/38	1,1/-/3	60	2P	Ii0	2,5	Sol. 6	543	Sol. 8	Max. value	160	20	48	No	1200x800x900	950	Very heavy	C5M or C4H	Yes	Yes
GST001/1602	Brazil	110558	15	ONAN	13,8	+1x4,35% - 3x4,35%	0,38-0,22	17,5/95/38	1,1/-/3	60	3P	Dyn1	3,5	Sol. 6	543	Sol. 8	Max. value	270	56	48	No	1300x1300x750	950	Very heavy	C5M or C4H	Yes	Yes
GST001/1602N	Brazil	110661	15	KNAN	13,8	+1x4,35% - 3x4,35%	0,38-0,22	17,5/95/38	1,1/-/3	60	3P	Dyn1	3,5	Sol. 6	543	Sol. 8	Max. value	270	56	48	No	1300x1300x750	950	Very heavy	C5M or C4H	Yes	Yes
GST001/1604	Brazil	110581	75	ONAN	13,8	+1x4,35% - 3x4,35%	0,38-0,22	17,5/95/38	1,1/-/3	60	3P	Dyn1	3,5	Sol. 6	543	Sol. 8	Max. value	910	106	51	No	1300x1300x750	950	Very heavy	C5M or C4H	Yes	Yes
GST001/1604N	Brazil	110583	75	KNAN	13,8	+1x4,35% - 3x4,35%	0,38-0,22	17,5/95/38	1,1/-/3	60	3P	Dyn1	3,5	Sol. 6	543	Sol. 8	Max. value	910	106	51	No	1300x1300x750	950	Very heavy	C5M or C4H	Yes	Yes
GST001/1606	Brazil	110568	150	ONAN	13,8	+1x4,35% - 3x4,35%	0,38-0,22	17,5/95/38	1,1/-/3	60	3P	Dyn1	3,5	Sol. 6	543	Sol. 8	Max. value	1530	179	55	No	1300x1300x750	950	Very heavy	C5M or C4H	Yes	Yes
GST001/1606N	Brazil	110564	150	KNAN	13,8	+1x4,35% - 3x4,35%	0,38-0,22	17,5/95/38	1,1/-/3	60	3P	Dyn1	3,5	Sol. 6	543	Sol. 8	Max. value	1530	179	55	No	1300x1300x750	950	Very heavy	C5M or C4H	Yes	Yes
GST001/1607	Brazil	110555	225	ONAN	13,8	+1x4,35% - 3x4,35%	0,38-0,22	17,5/95/38	1,1/-/3	60	3P	Dyn1	4,5	Sol. 6	543	Sol. 8	Max. value	2160	248	55	No	1800x1600x1000	1500	Very heavy	C5M or C4H	Yes	Yes
GST001/1607N	Brazil	110660	225	KNAN	13,8	+1x4,35% - 3x4,35%	0,38-0,22	17,5/95/38	1,1/-/3	60	3P	Dyn1	4,5	Sol. 6	543	Sol. 8	Max. value	2160	248	55	No	1800x1600x1000	1500	Very heavy	C5M or C4H	Yes	Yes
GST001/1608	Brazil	110544	300	ONAN	13,8	+1x4,35% - 3x4,35%	0,38-0,22	17,5/95/38	1,1/-/3	60	3P	Dyn1	4,5	Sol. 6	543	Sol. 8	Max. value	2690	312	55	No	1800x1600x1000	1500	Very heavy	C5M or C4H	Yes	Yes
GST001/1608N	Brazil	110545	300	KNAN	13,8	+1x4,35% - 3x4,35%	0,38-0,22	17,5/95/38	1,1/-/3	60	3P	Dyn1	4,5	Sol. 6	543	Sol. 8	Max. value	2690	312	55	No	1800x1600x1000	-	Very heavy	C5M or C4H	Yes	Yes
GST001/1609	Brazil	110551	10	ONAN	7,967	- 2x4,35%	0,22	17,5/95/38	1,1/-/3	60	1P	Ii0	2,5	Sol. 6	543	Sol. 8	Max. value	160	20	48	No	1200x800x900	950	Very heavy	C5M or C4H	Yes	Yes
GST001/1609N	Brazil	110663	10	KNAN	7,967	- 2x4,35%	0,22	17,5/95/38	1,1/-/3	60	1P	Ii0	2,5	Sol. 6	543	Sol. 8	Max. value	160	20	48	No	1200x800x900	950	Very heavy	C5M or C4H	Yes	Yes
GST001/1617	Brazil	110662	630	ONAN	13,8	+1x4,35% - 3x4,35%	0,38-0,22	17,5/95/38	1,1/-/3	60	3P	Dyn1	4	Sol. 5	N/A	Sol. 8	Max. value	4600	540	56	Yes	1850x1800x1030	-	Very heavy	C5M or C4H	No	No
GST001/1617N	Brazil	110536	630	KNAN	13,8	+1x4,35% - 3x4,35%	0,38-0,22	17,5/95/38	1,1/-/3	60	3P	Dyn1	4	Sol. 5	N/A	Sol. 8	Max. value	4600	540	56	Yes	1850x1800x1030	-	Very heavy	C5M or C4H	No	No

GST001/1903	Brazil	110566	15	ONAN	7,967	- 4x4,35%	0,24-0,12	17,5/95/38	1,1/-/3	60	1P	Ii0	3,5	Sol. 6	543	Sol. 8	Max. value	220	33	48	No	1200x800x900	750	Very heavy	C5M or C4H	Yes	Yes
GST001/1903N	Brazil	110659	15	KNAN	7,967	- 4x4,35%	0,24-0,12	17,5/95/38	1,1/-/3	60	1P	Ii0	3,5	Sol. 6	543	Sol. 8	Max. value	220	33	48	No	1200x800x900	750	Very heavy	C5M or C4H	Yes	Yes
GST001/1904	Brazil	110559	15	ONAN	13,8	- 4x4,35%	0,24-0,12	17,5/95/38	1,1/-/3	60	2P	Ii0	3,5	Sol. 6	543	Sol. 8	Max. value	220	33	48	No	1200x800x900	750	Very heavy	C5M or C4H	Yes	Yes
GST001/1904N	Brazil	110658	15	KNAN	13,8	- 4x4,35%	0,24-0,12	17,5/95/38	1,1/-/3	60	2P	Ii0	3,5	Sol. 6	543	Sol. 8	Max. value	220	33	48	No	1200x800x900	750	Very heavy	C5M or C4H	Yes	Yes
GST001/1905	Brazil	110588	30	ONAN	13,8	- 4x4,35%	0,22-0,127	17,5/95/38	1,1/-/3	60	3P	Dyn1	3,5	Sol. 6	543	Sol. 8	Max. value	450	67	48	No	1300x1300x750	750	Very heavy	C5M or C4H	Yes	Yes
GST001/1905N	Brazil	110655	30	KNAN	13,8	- 4x4,35%	0,22-0,127	17,5/95/38	1,1/-/3	60	3P	Dyn1	3,5	Sol. 6	543	Sol. 8	Max. value	450	67	48	No	1300x1300x750	750	Very heavy	C5M or C4H	Yes	Yes
GST001/1907	Brazil	110586	75	ONAN	13,8	- 4x4,35%	0,22-0,127	17,5/95/38	1,1/-/3	60	3P	Dyn1	3,5	Sol. 6	543	Sol. 8	Max. value	910	106	51	No	1300x1350x950	750	Very heavy	C5M or C4H	Yes	Yes
GST001/1907N	Brazil	110654	75	KNAN	13,8	- 4x4,35%	0,22-0,127	17,5/95/38	1,1/-/3	60	3P	Dyn1	3,5	Sol. 6	543	Sol. 8	Max. value	910	106	51	No	1300x1350x950	750	Very heavy	C5M or C4H	Yes	Yes
GST001/1908	Brazil	110571	150	ONAN	13,8	- 4x4,35%	0,22-0,127	17,5/95/38	1,1/-/3	60	3P	Dyn1	3,5	Sol. 6	543	Sol. 8	Max. value	1530	179	55	No	1300x1350x950	750	Very heavy	C5M or C4H	Yes	Yes
GST001/1908N	Brazil	110657	150	KNAN	13,8	- 4x4,35%	0,22-0,127	17,5/95/38	1,1/-/3	60	3P	Dyn1	3,5	Sol. 6	543	Sol. 8	Max. value	1530	179	55	No	1300x1350x950	750	Very heavy	C5M or C4H	Yes	Yes
GST001/1909	Brazil	110547	300	ONAN	13,8	- 4x4,35%	0,22-0,127	17,5/95/38	1,1/-/3	60	3P	Dyn1	4,5	Sol. 6	543	Sol. 8	Max. value	2690	312	55	No	1800x1650x1150	1200	Very heavy	C5M or C4H	Yes	Yes
GST001/1909N	Brazil	110656	300	KNAN	13,8	- 4x4,35%	0,22-0,127	17,5/95/38	1,1/-/3	60	3P	Dyn1	4,5	Sol. 6	543	Sol. 8	Max. value	2690	312	55	No	1800x1650x1150	1200	Very heavy	C5M or C4H	Yes	Yes
GST001/1921	Brazil	110550	225	ONAN	23,1 (Group O)	1+ 2 x - 4,76%	0,22-0,127	24/125/50	1,1/-/3	60	3P	Dyn1	5	Sol. 6	600	Sol. 8	Max. value	2183	248	55	No	2000x1700x1200	1500	Heavy	C4M or C3H	Yes	Yes
GST001/1922	Brazil	110560	150	ONAN	23,1 (Group O)	1+ 2 x - 4,76%	0,22-0,127	24/125/50	1,1/-/3	60	3P	Dyn1	4	Sol. 6	600	Sol. 8	Max. value	1630	179	55	No	1600x1450x950	950	Heavy	C4M or C3H	Yes	Yes
GST001/1924	Brazil	110567	75	ONAN	23,1 (Group O)	1+ 2 x - 4,76%	0,22-0,127	24/125/50	1,1/-/3	60	3P	Dyn1	4	Sol. 6	600	Sol. 8	Max. value	970	106	51	No	1600x1450x950	950	Heavy	C4M or C3H	Yes	Yes
GST001/1926	Brazil	110597	30	ONAN	23,1 (Group O)	1+ 2 x - 4,76%	0,22-0,127	24/125/50	1,1/-/3	60	3P	Dyn1	4	Sol. 6	600	Sol. 8	Max. value	475	67	48	No	1600x1400x900	950	Heavy	C4M or C3H	Yes	Yes
GST001/1932	Brazil	110572	100	ONAN	13,972 (Group I)	1+2x-4,54%	0,24-0,12	17,5/95/38	1,1/-/3	60	1P	Subtractive	2,5	Sol. 6	437	Sol. 8	Max. value	985	130	51	No	1700x900x1000	950	Heavy	C4M or C3H	Yes	Yes

GST001/1933	Brazil	110589	50	ONAN	13,972 (Group I)	1+2x-4,54%	0,24-0,12	17,5/95/38	1,1/-/3	60	1P	Subtractive	2,5	Sol. 6	437	Sol. 8	Max. value	510	80	48	No	1700x900x1000	950	Heavy	C4M or C3H	Yes	Yes
GST001/1934	Brazil	110587	25	ONAN	13,972 (Group I)	1+2x-4,54%	0,24-0,12	17,5/95/38	1,1/-/3	60	1P	Subtractive	2,5	Sol. 6	437	Sol. 8	Max. value	325	49	48	No	1300x800x900	950	Heavy	C4M or C3H	Yes	Yes
GST001/1936	Brazil	110569	25	ONAN	7,967 (Group G)	1+ 2x - 4,35%	0,24-0,12	17,5/95/38	1,1/-/3	60	1P	Additive	2,5	Sol. 6	437	Sol. 8	Max. value	325	49	48	No	1200x800x900	950	Heavy	C4M or C3H	Yes	Yes
GST001/1937	Brazil	110582	25	ONAN	7,967-2,320 (Group H)	1+ 2x - 4,35% (7,967) / 1+ 2x - 4,74% (2,320)	0,24-0,12	17,5/95/38	1,1/-/3	60	1P	Additive	2,5	Sol. 6	437	Sol. 8	Max. value	325	51	48	No	1200x800x900	950	Heavy	C4M or C3H	Yes	Yes
GST001/1938	Brazil	110592	50	ONAN	7,967 (Group G)	1+ 2x - 4,35%	0,24-0,12	17,5/95/38	1,1/-/3	60	1P	Additive	2,5	Sol. 6	437	Sol. 8	Max. value	510	80	48	No	1400x900x1000	950	Heavy	C4M or C3H	Yes	Yes
GST001/1939	Brazil	110590	50	ONAN	7,967-2,320 (Group H)	1+ 2x - 4,35% (7,967) / 1+ 2x - 4,74% (2,320)	0,24-0,12	17,5/95/38	1,1/-/3	60	1P	Additive	2,5	Sol. 6	437	Sol. 8	Max. value	510	83	48	No	1400x900x1000	950	Heavy	C4M or C3H	Yes	Yes
GST001/1941	Brazil	110580	75	ONAN	13,8-3,98 (Group M/L)	1+ 2x - 4,35%(13,8) / 1+ 2x-5,01%(3,98)	0,22-0,127	17,5/95/38	1,1/-/3	60	3P	Dyn1	3,5	Sol. 6	437	Sol. 8	Max. value	910	121	51	No	1300x1350x950	950	Heavy	C4M or C3H	Yes	Yes
GST001/1942	Brazil	110574	100	ONAN	7,967 (Group G)	1+ 2x - 4,35%	0,24-0,12	17,5/95/38	1,1/-/3	60	1P	Additive	2,5	Sol. 6	437	Sol. 8	Max. value	985	130	51	No	1400x900x1000	950	Heavy	C4M or C3H	Yes	Yes
GST001/1943	Brazil	110573	100	ONAN	7,967-2,320 (Group H)	1+ 2x - 4,35% (7,967) / 1+ 2x - 4,74% (2,320)	0,24-0,12	17,5/95/38	1,1/-/3	60	1P	Additive	2,5	Sol. 6	437	Sol. 8	Max. value	985	136	51	No	1400x900x1000	950	Heavy	C4M or C3H	Yes	Yes
GST001/1947	Brazil	110561	150	ONAN	13,8-3,98 (Group M/L)	1+ 2x - 4,35%(13,8) / 1+ 2x-5,01%(3,98)	0,22-0,127	17,5/95/38	1,1/-/3	60	3P	Dyn1	3,5	Sol. 6	437	Sol. 8	Max. value	1530	206	55	No	1300x1350x950	950	Heavy	C4M or C3H	Yes	Yes
GST001/1948	Brazil	110557	225	ONAN	13,8 (Group M)	1+ 2x - 4,35%	0,22-0,127	17,5/95/38	1,1/-/3	60	3P	Dyn1	4,5	Sol. 6	437	Sol. 8	Max. value	2160	248	55	No	1800x1650x1150	1500	Heavy	C4M or C3H	Yes	Yes
GST001/1949	Brazil	110554	225	ONAN	13,8-3,98 (Group M/L)	1+ 2x - 4,35%(13,8) / 1+ 2x-5,01%(3,98)	0,22-0,127	17,5/95/38	1,1/-/3	60	3P	Dyn1	4,5	Sol. 6	437	Sol. 8	Max. value	2160	285	55	No	1800x1650x1150	1500	Heavy	C4M or C3H	Yes	Yes
GST001/1951	Brazil	110543	300	ONAN	13,8-3,98 (Group M/L)	1+ 2x - 4,35%(13,8) / 1+ 2x-5,01%(3,98)	0,22-0,127	17,5/95/38	1,1/-/3	60	3P	Dyn1	4,5	Sol. 6	437	Sol. 8	Max. value	2690	358	55	No	1800x1650x1150	1500	Heavy	C4M or C3H	Yes	Yes
GST001/1953N	Brazil	110548	225	KNAN	23,1 (Group O)	1+ 2 x - 4,76%	0,22-0,127	24/125/50	1,1/-/3	60	3P	Dyn1	5	Sol. 6	600	Sol. 8	Max. value	2183	248	55	No	2000x1700x1200	1500	Heavy	C4M or C3H	Yes	Yes
GST001/1954N	Brazil	110562	150	KNAN	23,1 (Group O)	1+ 2 x - 4,76%	0,22-0,127	24/125/50	1,1/-/3	60	3P	Dyn1	4	Sol. 6	600	Sol. 8	Max. value	1630	179	55	No	1600x1450x950	950	Heavy	C4M or C3H	Yes	Yes

GST001/1956N	Brazil	110578	75	KNAN	23,1 (Group O)	1+ 2 x - 4,76%	0,22-0,127	24/125/50	1,1/-/3	60	3P	Dyn1	4	Sol. 6	600	Sol. 8	Max. value	970	106	51	No	1600x1450x950	950	Heavy	C4M or C3H	Yes	Yes
GST001/1958N	Brazil	110598	30	KNAN	23,1 (Group O)	1+ 2 x - 4,76%	0,22-0,127	24/125/50	1,1/-/3	60	3P	Dyn1	4	Sol. 6	600	Sol. 8	Max. value	475	67	48	No	1600x1400x900	950	Heavy	C4M or C3H	Yes	Yes
GST001/1962N	Brazil	110591	30	KNAN	13,8 (Group M)	1+ 2x - 4,35%	0,22-0,127	17,5/95/38	1,1/-/3	60	3P	Dyn1	3,5	Sol. 6	437	Sol. 8	Max. value	450	67	48	No	1300x1300x750	950	Heavy	C4M or C3H	Yes	Yes
GST001/1964N	Brazil	110575	100	KNAN	13,972 (Group I)	1+2x-4,54%	0,24-0,12	17,5/95/38	1,1/-/3	60	1P	Subtractive	2,5	Sol. 6	437	Sol. 8	Max. value	985	130	51	No	1700x900x1000	950	Heavy	C4M or C3H	Yes	Yes
GST001/1965N	Brazil	110593	50	KNAN	13,972 (Group I)	1+2x-4,54%	0,24-0,12	17,5/95/38	1,1/-/3	60	1P	Subtractive	2,5	Sol. 6	437	Sol. 8	Max. value	510	80	48	No	1700x900x1000	950	Heavy	C4M or C3H	Yes	Yes
GST001/1966N	Brazil	110553	25	KNAN	13,972 (Group I)	1+2x-4,54%	0,24-0,12	17,5/95/38	1,1/-/3	60	1P	Subtractive	2,5	Sol. 6	437	Sol. 8	Max. value	325	49	48	No	1300x800x900	950	Heavy	C4M or C3H	Yes	Yes
GST001/1968N	Brazil	110570	25	KNAN	7,967 (Group G)	1+ 2x - 4,35%	0,24-0,12	17,5/95/38	1,1/-/3	60	1P	Additive	2,5	Sol. 6	437	Sol. 8	Max. value	325	49	48	No	1200x800x900	950	Heavy	C4M or C3H	Yes	Yes
GST001/1969N	Brazil	110584	25	KNAN	7,967-2,320 (Group H)	1+ 2x - 4,35% (7,967) / 1+ 2x - 4,74% (2,320)	0,24-0,12	17,5/95/38	1,1/-/3	60	1P	Additive	2,5	Sol. 6	437	Sol. 8	Max. value	325	51	48	No	1200x800x900	950	Heavy	C4M or C3H	Yes	Yes
GST001/1970N	Brazil	110596	50	KNAN	7,967 (Group G)	1+ 2x - 4,35%	0,24-0,12	17,5/95/38	1,1/-/3	60	1P	Additive	2,5	Sol. 6	437	Sol. 8	Max. value	510	80	48	No	1400x900x1000	950	Heavy	C4M or C3H	Yes	Yes
GST001/1971N	Brazil	110594	50	KNAN	7,967-2,320 (Group H)	1+ 2x - 4,35% (7,967) / 1+ 2x - 4,74% (2,320)	0,24-0,12	17,5/95/38	1,1/-/3	60	1P	Additive	2,5	Sol. 6	437	Sol. 8	Max. value	510	83	48	No	1400x900x1000	950	Heavy	C4M or C3H	Yes	Yes
GST001/1972N	Brazil	110585	75	KNAN	13,8 (Group M)	1+ 2x - 4,35%	0,22-0,127	17,5/95/38	1,1/-/3	60	3P	Dyn1	3,5	Sol. 6	437	Sol. 8	Max. value	910	106	51	No	1300x1350x950	950	Heavy	C4M or C3H	Yes	Yes
GST001/1973N	Brazil	110579	75	KNAN	13,8-3,98 (Group M/L)	1+ 2x - 4,35%(13,8) / 1+ 2x-5,01%(3,98)	0,22-0,127	17,5/95/38	1,1/-/3	60	3P	Dyn1	3,5	Sol. 6	437	Sol. 8	Max. value	910	121	51	No	1300x1350x950	950	Heavy	C4M or C3H	Yes	Yes
GST001/1974N	Brazil	110577	100	KNAN	7,967 (Group G)	1+ 2x - 4,35%	0,24-0,12	17,5/95/38	1,1/-/3	60	1P	Additive	2,5	Sol. 6	437	Sol. 8	Max. value	985	130	51	No	1400x900x1000	950	Heavy	C4M or C3H	Yes	Yes
GST001/1975N	Brazil	110576	100	KNAN	7,967-2,320 (Group H)	1+ 2x - 4,35% (7,967) / 1+ 2x - 4,74% (2,320)	0,24-0,12	17,5/95/38	1,1/-/3	60	1P	Additive	2,5	Sol. 6	437	Sol. 8	Max. value	985	136	51	No	1400x900x1000	950	Heavy	C4M or C3H	Yes	Yes
GST001/1978N	Brazil	110565	150	KNAN	13,8 (Group M)	1+ 2x - 4,35%	0,22-0,127	17,5/95/38	1,1/-/3	60	3P	Dyn1	3,5	Sol. 6	437	Sol. 8	Max. value	1530	179	55	No	1300x1350x950	950	Heavy	C4M or C3H	Yes	Yes

GST001/1979N	Brazil	110563	150	KNAN	13,8-3,98 (Group M/L)	1+ 2x - 4,35%(13,8) / 1+ 2x- 5,01%(3,98)	0,22-0,127	17,5/95/38	1,1/-/3	60	3P	Dyn1	3,5	Sol. 6	437	Sol. 8	Max. value	1530	206	55	No	1300x1350x950	950	Heavy	C4M or C3H	Yes	Yes
GST001/1980N	Brazil	110556	225	KNAN	13,8 (Group M)	1+ 2x - 4,35%	0,22-0,127	17,5/95/38	1,1/-/3	60	3P	Dyn1	4,5	Sol. 6	437	Sol. 8	Max. value	2160	248	55	No	1800x1650x1150	1500	Heavy	C4M or C3H	Yes	Yes
GST001/1981N	Brazil	110552	225	KNAN	13,8-3,98 (Group M/L)	1+ 2x - 4,35%(13,8) / 1+ 2x- 5,01%(3,98)	0,22-0,127	17,5/95/38	1,1/-/3	60	3P	Dyn1	4,5	Sol. 6	437	Sol. 8	Max. value	2160	285	55	No	1800x1650x1150	1500	Heavy	C4M or C3H	Yes	Yes
GST001/1982N	Brazil	110546	300	KNAN	13,8 (Group M)	1+ 2x - 4,35%	0,22-0,127	17,5/95/38	1,1/-/3	60	3P	Dyn1	4,5	Sol. 6	437	Sol. 8	Max. value	2690	312	55	No	1800x1650x1150	1500	Heavy	C4M or C3H	Yes	Yes
GST001/1983N	Brazil	110542	300	KNAN	13,8-3,98 (Group M/L)	1+ 2x - 4,35%(13,8) / 1+ 2x- 5,01%(3,98)	0,22-0,127	17,5/95/38	1,1/-/3	60	3P	Dyn1	4,5	Sol. 6	437	Sol. 8	Max. value	2690	358	55	No	1800x1650x1150	1500	Heavy	C4M or C3H	Yes	Yes
GST001/1984N	Brazil	110600	30	KNAN	13,8	- 4x4,35%	0,22-0,127	17,5/95/38	1,1/-/3	60	3P	Dyn1	4	Sol. 5	N/A	Sol. 8	Max. value	450	67	48	Yes	1300x1300x750	-	Very heavy	C5M or C4H	No	No
GST001/1985N	Brazil	110540	400	KNAN	13,8	- 4x4,35%	0,22-0,127	17,5/95/38	1,1/-/3	60	3P	Dyn1	4	Sol. 5	N/A	Sol. 8	Max. value	2690	387	55	Yes	1850x1600x1030	-	Very heavy	C5M or C4H	No	No
GST001/1986N	Brazil	110537	630	KNAN	13,8	- 4x4,35%	0,22-0,127	17,5/95/38	1,1/-/3	60	3P	Dyn1	4	Sol. 5	N/A	Sol. 8	Max. value	4600	540	56	Yes	1850x1800x1030	-	Very heavy	C5M or C4H	No	No
GST001/1987N	Brazil	110534	800	KNAN	13,8	- 4x4,35%	0,22-0,127	17,5/95/38	1,1/-/3	60	3P	Dyn1	4	Sol. 5	N/A	Sol. 8	Max. value	6000	585	57	Yes	1850X1800X1030	-	Very heavy	C5M or C4H	No	No
GST001/1988N	Brazil	110531	1000	KNAN	13,8	- 4x4,35%	0,22-0,127	17,5/95/38	1,1/-/3	60	3P	Dyn1	4	Sol. 5	N/A	Sol. 8	Max. value	7600	693	58	Yes	1850X1800X1030	-	Very heavy	C5M or C4H	No	No
GST001/1989N	Brazil	110599	30	KNAN	13,8	+1x4,35% - 3x4,35%	0,38-0,22	17,5/95/38	1,1/-/3	60	3P	Dyn1	4	Sol. 5	N/A	Sol. 8	Max. value	450	67	48	Yes	1300x1300x750	-	Very heavy	C5M or C4H	No	No
GST001/1990N	Brazil	110539	400	KNAN	13,8	+1x4,35% - 3x4,35%	0,38-0,22	17,5/95/38	1,1/-/3	60	3P	Dyn1	4	Sol. 5	N/A	Sol. 8	Max. value	2690	387	55	Yes	1850x1600x1030	-	Very heavy	C5M or C4H	No	No
GST001/1991N	Brazil	110533	800	KNAN	13,8	+1x4,35% - 3x4,35%	0,38-0,22	17,5/95/38	1,1/-/3	60	3P	Dyn1	4	Sol. 5	N/A	Sol. 8	Max. value	6000	585	57	Yes	1850X1800X1030	-	Very heavy	C5M or C4H	No	No
GST001/1992N	Brazil	110530	1000	KNAN	13,8	+1x4,35% - 3x4,35%	0,38-0,22	17,5/95/38	1,1/-/3	60	3P	Dyn1	4	Sol. 5	N/A	Sol. 8	Max. value	7600	693	58	Yes	1850X1800X1030	-	Very heavy	C5M or C4H	No	No
GST001/1993N	Brazil	110595	30	KNAN	34,5	- 4x4,35%	0,22-0,127	36/170/70	1,1/-/3	60	3P	Dyn1	4	Sol. 5	N/A	Sol. 8	Max. value	505	77	48	Yes	1600x1400x900	-	Very heavy	C5M or C4H	No	No
GST001/1994N	Brazil	110541	400	KNAN	34,5	- 4x4,35%	0,22-0,127	36/170/70	1,1/-/3	60	3P	Dyn1	4	Sol. 5	N/A	Sol. 8	Max. value	2690	445	55	Yes	1850x1600x1030	-	Very heavy	C5M or C4H	No	No

GST001/1995N	Brazil	110538	630	KNAN	34,5	- 4x4,35%	0,22-0,127	36/170/70	1,1/-/3	60	3P	Dyn1	4	Sol. 5	N/A	Sol. 8	Max. value	5060	621	56	Yes	1850x1800x1030	-	Very heavy	C5M or C4H	No	No
GST001/1996N	Brazil	110535	800	KNAN	34,5	- 4x4,35%	0,22-0,127	36/170/70	1,1/-/3	60	3P	Dyn1	4	Sol. 5	N/A	Sol. 8	Max. value	6500	673	57	Yes	1850X1800X1030	-	Very heavy	C5M or C4H	No	No
GST001/1997N	Brazil	110532	1000	KNAN	34,5	- 4x4,35%	0,22-0,127	36/170/70	1,1/-/3	60	3P	Dyn1	4	Sol. 5	N/A	Sol. 8	Max. value	8360	797	58	Yes	1850X1800X1030	-	Very heavy	C5M or C4H	No	No

ANNEX B: TECHNICAL OFFER

This information has been designed for evaluating the compliance of a technical proposal (exclusively in a technical point of view) during the tender process and also might be used for the technical data validation during homologation, certification and/or approval procedures, if not specific documents is indicated.

The acceptance of the document for the tender stage does not mean the acceptance of any deviation to the technical specification if such deviations are not clearly reported.

Deviations are in principle not acceptable. Any deviation or any approach different from the Technical Specification GST001 shall be declared and explicitly highlighted, in order to be evaluated during the tender process.

ENEL TR Dx - TECHNICAL OFFER TEMPLATE

Item	RATINGS	Enel Requeriment	Manufacturer Declared Data (if not relevant indicate "---")	Manufacturer Notes (add remarks, if necessary)
1	GS TYPE CODE			
2	Dx. Company - Country (Enel Group)			
3	Country Code			
4	Nº of Phases			
5	Rated frequency fr (Hz)			
6	Connection Symbol			
7	Rated Power S_r (kVA)			
8	Cooling System			
9	Primary Rated Voltage U_r (kV)			
10	HV ins. Levels - (U_m/LI/AC) (kV)			
11	HV Volt. Reg. Type (DETC-NO DETC)			
12	HV Volt. Reg. (n. of steps, value %)			
13	Secondary Rated Voltage U_r (kV)			
14	LV Insulation levels (Um/LI/AC) (kV)			
15	Z_{sc} (% ref. S_r)			

16	Losses classes or max values			
17	Load Loss (W)			
18	No Load Loss (W)			
19	Sound level Power (dBA)			
20	Overall dimensions (mm) (H x L x W)			
21	Height (mm)			
22	Length (mm)			
23	Width (mm)			
24	MAIN COMPONENTS AND ACCESSORIES		Manufacturer Declared Data(if not relevant indicate "---")	Manufacturer Notes(add remarks, if necessary)
25	Primary bushings Type - Standard			
26	MV Minimum creepage distance (mm)			
27	Secondary bushings Type - Standard			
28	Thermal devices			
29	Thermometer (YES/NO)			
30	Standard reference/ Technical Specification(if any), to be indicated			
31	Insulating Liquid			
32	Type			
33	Standard reference to be indicated			
34	Other Accesories			
35	Lifting (ϕ mm) - Blocking devices (ϕ mm)			
36	Oil drain (reference standard)			
37	Support for surge arresters (Yes/ No)			
38	Filling hole and plug (filling cap)			
39	Brackets for pole (Yes/ No)			
40	Wheels (Yes/No)			
41	Over-pressure valve			
42	DESIGN DATA		Manufacturer Declared	Manufacturer Notes(add

			Data(if not relevant indicate "---")	remarks, if necessary)
43	Windings and core	Primary - Secondary	Primary - Secondary	
44	Conductor material Type			
45	Core material type			
46	Painting cycle			
47	Painting category (C3M, C3H, C4H, …)			
48	Certificate in compliance to ISO 12944 (Yes/No)			
49	Weights			
50	Oil (as in operation) (Liters)			
51	Total (kg)			
52	Additional Requeriment			
53	Additional Requeriment 1			
54	Additional Requeriment 2			
55	Additional Requeriment 3			
56	DEVIATIONS		Manufacturer Declared Data (if not relevant indicate "---")	Manufacturer Notes (add remarks, if necessary)
57	Deviations (YES/NO) Indicate if there is any deviation from Global Standard/Datasheet. if there is any deviation, the name of the Deviation Document attached - Each specific deviation must be reported and explained(Manufacurer Notes).			

IMPORTANT:

This template is used for evaluating the compliance of a technical proposal (exclusively in a technical point of view) during the tender process. Deviations are in principle not acceptable. Any deviation or any approach different from the technical specification GST001/Datasheet must be declared and explicitly highlighted in order to be evaluated in the tender process.

ANNEX C – BRAZIL

7.2.18 Rating plates

All transformers must have the National Energy Conservation Label - ENCE of the Brazilian Labeling Program - PBE, according to Portaria Interministerial n°3/2018 and Portaria Inmetro nº 382/ 2021.

7.6 Tests

To verify the PCB content in the insulating liquid, the equipment must be tested in accordance with ABNT NBR 13882, and meet the minimum requirements established by Portaria Interministerial n° 107/2022.

ANNEX E – COLOMBIA

7.2.12 Losses, short circuit impedances and sound power levels

For the GS Type codes shown in the following table, the load and no-load losses refer to a temperature of 85 °C:

GS Type Code	Rated Power (kVA)	Cooling System	Rated MV (kV)	N. of phases 1P, 2P, 3P	Losses classes or max values	Load Loss (W)	No Load Loss (W)
GST001/1718N	5	KNAN	11,4	2P	max. value	90	11
GST001/1719N	5	KNAN	13,2	2P	max. value	90	11
GST001/1720N	5	KNAN	11,4 - 13,2	2P	max. value	99	12
GST001/1723N	15	KNAN	11,4 - 13,2	2P	max. value	215	33
GST001/1721N	15	KNAN	11,4	2P	max. value	195	29
GST001/1722	15	ONAN	13,2	2P	max. value	195	29
GST001/1722N	15	KNAN	13,2	2P	max. value	195	29
GST001/1723	15	ONAN	11,4 - 13,2	2P	max. value	215	33
GST001/1724	25	ONAN	11,4	3P	max. value	515	63
GST001/1724N	25	KNAN	11,4	3P	max. value	515	63
GST001/1725	25	ONAN	13,2	3P	max. value	515	63
GST001/1725N	25	KNAN	13,2	3P	max. value	515	63
GST001/1726	25	ONAN	11,4 - 13,2	3P	max. value	567	72
GST001/1726N	25	KNAN	11,4 - 13,2	3P	max. value	567	72

Load and no-load losses for all other codes in the List of Components shall refer to a temperature of 75 °C (IEC 60076-1).

7.3.6 Bushings

The LV bushing considered for Colombia is the solution 6, 7 or 8 as IEC 60137 and will be located over the lid. As an exception for the monophasic transformers the LV bushings are allowed in the tank.

For the codes shown in the following table, the MV and LV bushings to consider are Sol. 5 and sol. 7, respectively:

GS Type Code	Rated Power (kVA)	Cooling System	MV Bushing	LV Bushing
GST001/1756N	50	KNAN	Sol. 5	Sol. 7
GST001/1757N	100	KNAN	Sol. 5	Sol. 7
GST001/1751N	160	KNAN	Sol. 5	Sol. 7
GST001/1758N	160	KNAN	Sol. 5	Sol. 7
GST001/1752N	250	KNAN	Sol. 5	Sol. 7
GST001/1746N	400	KNAN	Sol. 5	Sol. 7
GST001/1746	400	ONAN	Sol. 5	Sol. 7
GST001/1754N	630	KNAN	Sol. 5	Sol. 7
GST001/1755N	1000	KNAN	Sol. 5	Sol. 7

For the rest of the codes, the following table applies for LV bushing:

Capacity (kVA)	LV Bushing
< 75	Eyebolt connector
>= 75 < 400	Spade H connector
>= 400	Bus Bar

Figures from ANSI IEEE C57.12.20 ***Standard for Overhead-Type Distribution Transformers 500 kVA and Smaller: High Voltage, 34 500 V and Below; Low Voltage, 7970/13 800Y V and Below***:

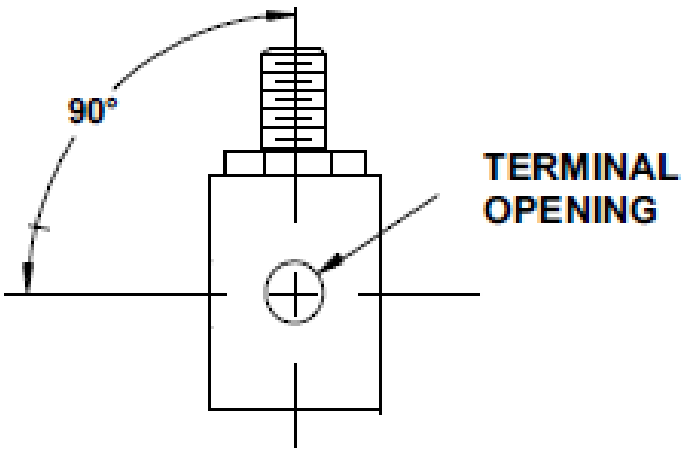

Figure E4 - Eyebolt connector

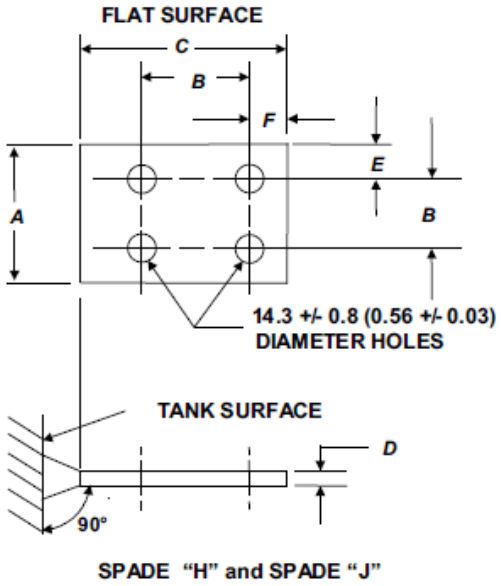

Dimensions	Spade H mm (in)	Spade J mm (in)
A	88.9 (3.50)	101.6 (4.00)
B	44.5 ± 0.8 (1.75 ± 0.03)	44.5 ± 0.8 (1.75 ± 0.03)
C min	85.7 (3.38)	114.3 (4.50)
D min	6.4 (0.25)	9.5 (0.38)
E	22.2 (0.88)	28.6 (1.13)
F	15.9 (0.63)	28.6 (1.13)

NOTE 1—Corners and edges may be rounded.

NOTE 2—Refer to Clause 7 for dimensions tolerances. All dimensions are in millimeters. Dimensions in parentheses are in inches.

Figure E5 - Spade H connector

Phase markings and identification

The sequence for each phase of the distribution transformer should be marked.

7.3.9.2 Sliding devices

Wheels are required for transformers equal and above 250 kVA. Below suggested image of the wheels.

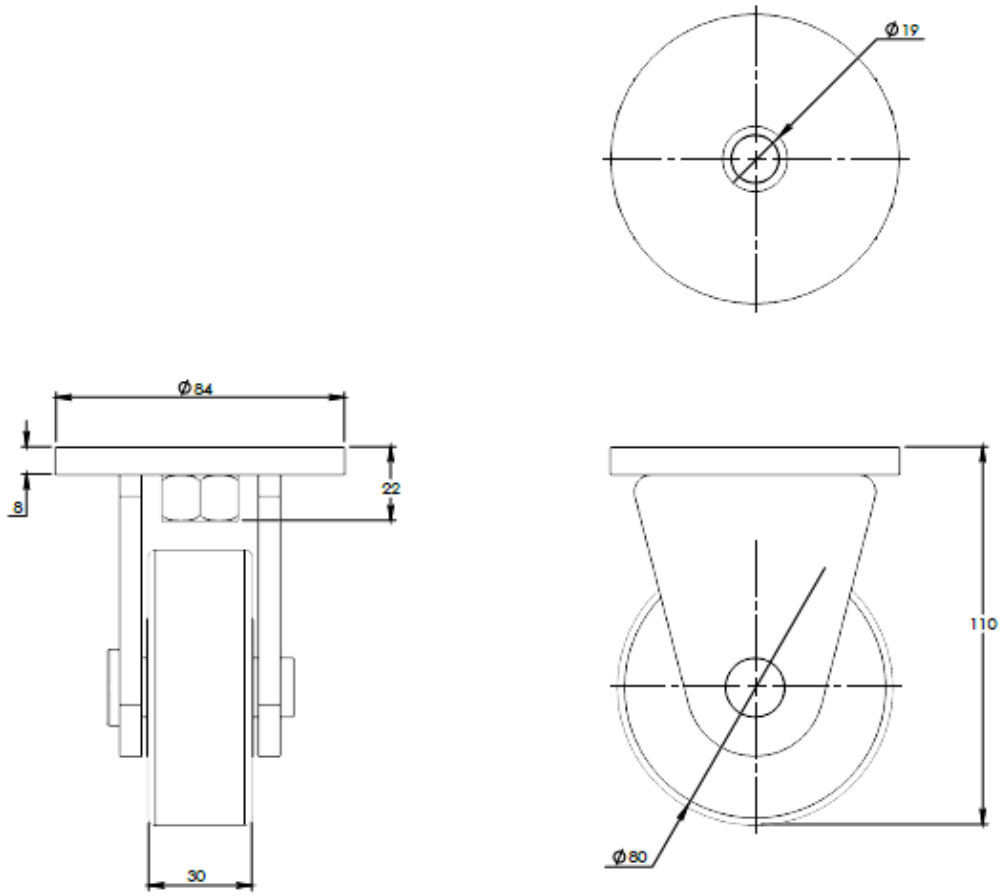

7.3.11.5 Overpressure valve

For gas cushion transformers the over pressure valve is required for rated power ≥ 160 kVA.

7.3.11.6 Liquid level indicator

See Common Part.

7.6 Tests

Unless otherwise specified IEC 60076-1 applies.

For the GS Type codes shown in the following table and where applicable, the tests shall be referred to a temperature shall of 85 °C:

GS Type Code	Rated Power (kVA)	Cooling System	Rated MV (kV)	N. of phases 1P, 2P, 3P	Losses classes or max values	Load Loss (W)	No Load Loss (W)
GST001/1718N	5	KNAN	11,4	2P	max. value	90	11
GST001/1719N	5	KNAN	13,2	2P	max. value	90	11
GST001/1720N	5	KNAN	11,4 - 13,2	2P	max. value	99	12
GST001/1723N	15	KNAN	11,4 - 13,2	2P	max. value	215	33
GST001/1721N	15	KNAN	11,4	2P	max. value	195	29
GST001/1722	15	ONAN	13,2	2P	max. value	195	29
GST001/1722N	15	KNAN	13,2	2P	max. value	195	29
GST001/1723	15	ONAN	11,4 - 13,2	2P	max. value	215	33
GST001/1724	25	ONAN	11,4	3P	max. value	515	63
GST001/1724N	25	KNAN	11,4	3P	max. value	515	63
GST001/1725	25	ONAN	13,2	3P	max. value	515	63
GST001/1725N	25	KNAN	13,2	3P	max. value	515	63
GST001/1726	25	ONAN	11,4 - 13,2	3P	max. value	567	72
GST001/1726N	25	KNAN	11,4 - 13,2	3P	max. value	567	72

For the rest of the codes, the reference temperature shall be 75 °C (IEC 60076-1).

ANNEX F - IBERIA/SPAIN

7.3.11.3 Thermometer pocket

The thermometer pocket shall be installed in all transformers.

See Common Part.

7.3.11.4 Thermometer

The thermometer shall be installed on the thermometer pocket, by the manufacturer in all the transformers with MV bushing outside cone plug-in type (Sol. 5, ref. GS p. 6.5.1), and will be included in the supply.

The type and model of thermometer to be installed on these transformers is indicated in the ENDESA Technical Specification 710256.

ANNEX H – PERU

7.3.10 Protective painting

The tank must be painting with the label: rated power, voltage ratio (see Figure H4).

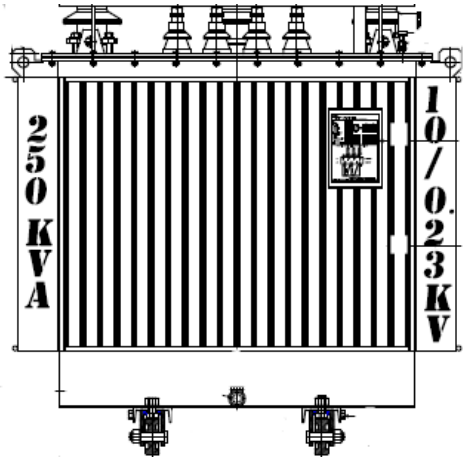

Figure H4: labels

7.3.11.3 Thermometer pocket

The thermometer pocket is requested for all transformers.

ANNEX I – ROMANIA

7.6.1.5.2 Criteria for type and special tests

In case of several transformers belong to the same family, it is possible to perform type or special test according to GSCG002 7.6.1 a) or b) on only one transformer, (key code), provided that all transformers are made using the same technology.

- Family 1: Transformers with rated power between 25 and 160 kVA, both included, all rated voltages; key code GST001/1120 (100 kVA).
- Family 2: Transformers with rated power between 250 and 400 kVA, both included, all rated voltages; key code GST001/1122 (250 kVA).
- Family 3: Transformers with rated power between 630 and 1000 kVA, both included, all rated voltages; key code GST001/1132 (630 kVA).
- Family 4: Transformers with rated power between 1250 and 2500 kVA, all rated voltages; key code GST001/1164 (2500 kVA).
- Family 5: Transformers with rated power between 25 and 160 kVA, both included, all rated voltages and natural ester; key code GST001/1120N (100 kVA).
- Family 6: Transformers with rated power between 250 and 400 kVA, all rated voltages and natural ester; key code GST001/1122N (250 kVA).
- Family 7: Transformers with rated power between 400 and 630 kVA, all rated voltages and synthetic ester; key code GST001/1132S (630 kVA).

- Family 8: Transformers with rated power between 630 and 1000 kVA, all rated voltages and natural ester; key code GST001/1132N (630 kVA).
- Family 9: Transformers with rated power between 1250 and 2500 kVA, all rated voltages and natural ester; key code GST001/1164N (2500 kVA).